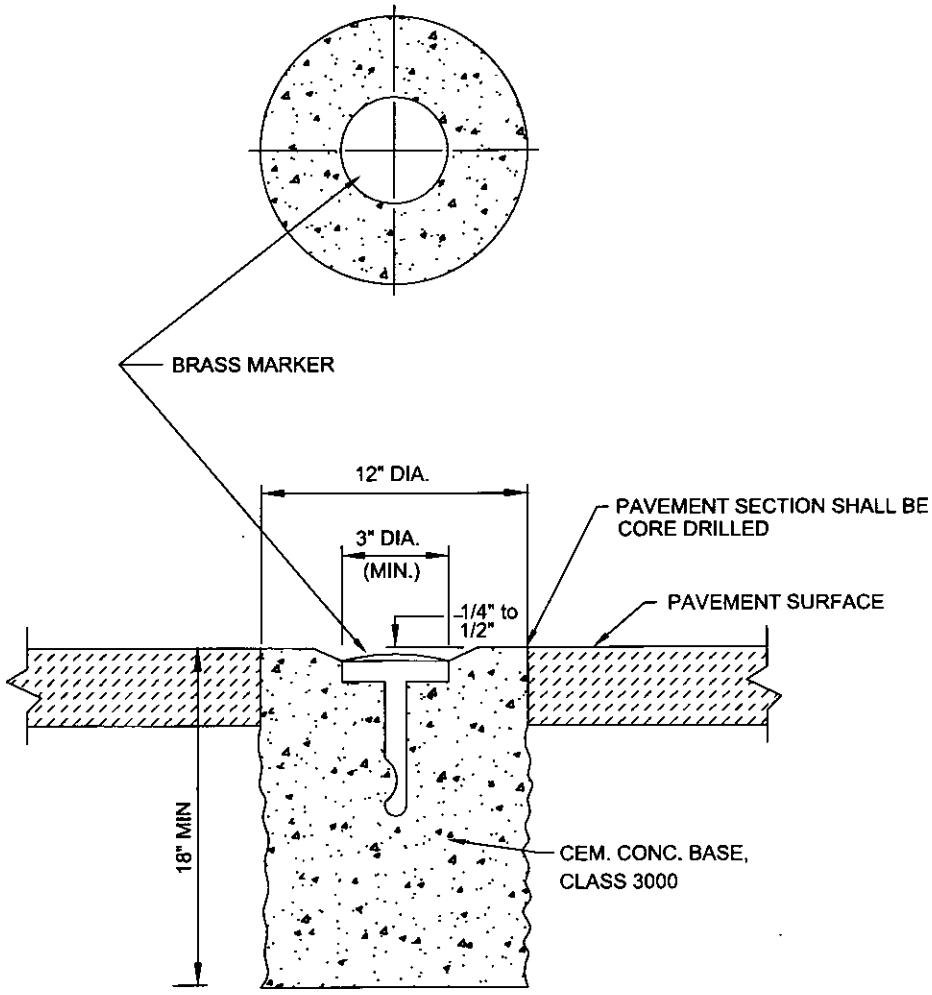

NOTES:

1. Concrete base shall be poured in place. Hand mixed concrete is prohibited. Concrete base need not be formed.
2. Notice to surveyors: any monument set in the City of Tacoma must bear the land surveyor number of the surveyor setting the monument. Monuments set as part of an approved plat are exempt.
3. The surveyor is to supply the City of Tacoma with a copy of the calculations used to determine all monument positions before the monuments are set.
4. Brass marker for City of Tacoma funded projects will be supplied by the City, all other brass markers to be supplied by the contractor.
5. Monument must be magnetically locatable.
6. Prior to removing or destroying a monument, the surveyor or engineer shall apply for a permit from the Department of Natural Resources in accordance with WAC 332-120.

CITY OF TACOMA DEPARTMENT OF PUBLIC WORKS	APPROVED FOR PUBLICATION James Parvey 09 Jun 2009 CITY ENGINEER DATE	POURED MONUMENT STANDARD PLAN NO. SU-01

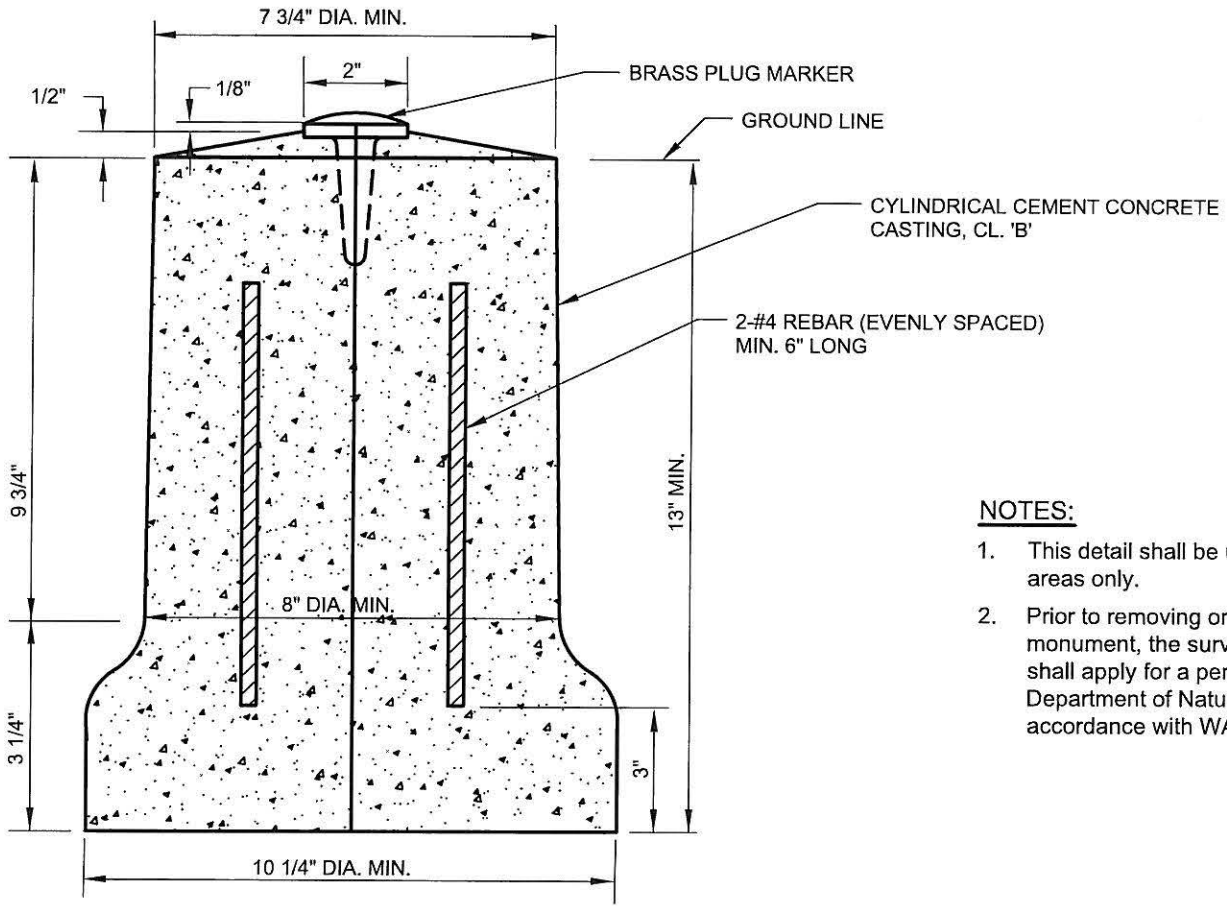

NOTES:

1. This detail shall be used in unpaved areas only.
2. Prior to removing or destroying a monument, the surveyor or engineer shall apply for a permit from the Department of Natural Resources in accordance with WAC 332-120.

CITY OF TACOMA DEPARTMENT OF PUBLIC WORKS	APPROVED FOR PUBLICATION James Parvey 09 Jun 2009 CITY ENGINEER DATE	PRECAST CONCRETE MONUMENT STANDARD PLAN NO. SU-02

NOTES:

(A) When used on high side of roadways, the cross slope of the gutter shall match the cross slope of the adjacent pavement. The height of the curb shall be 6", unless otherwise shown on plans.

(B) Flush with gutter pan at curb ramp entrance or ¾" vertical lip at driveway entrance.

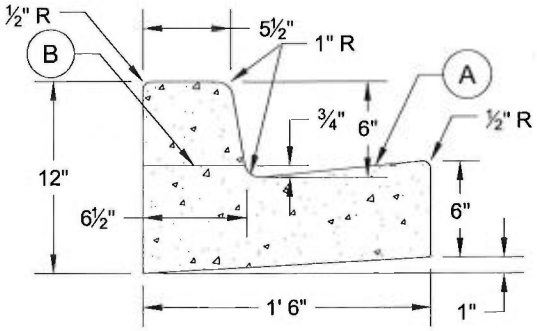

CEMENT CONCRETE TRAFFIC CURB & GUTTER

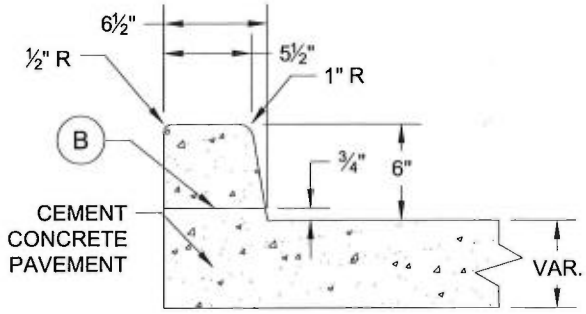

INTEGRAL CEMENT CONCRETE TRAFFIC CURB

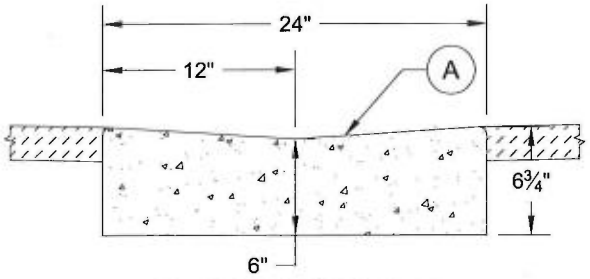

CEMENT CONCRETE VALLEY GUTTER

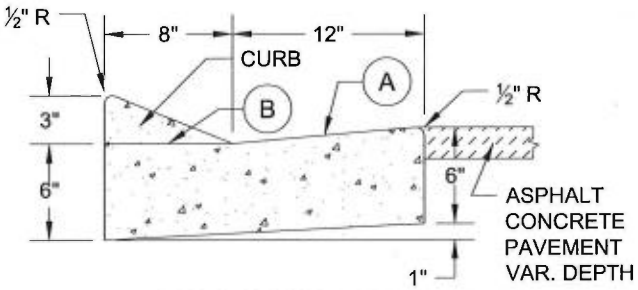

TYPE "C" MOUNTABLE CEMENT CONCRETE CURB & GUTTER

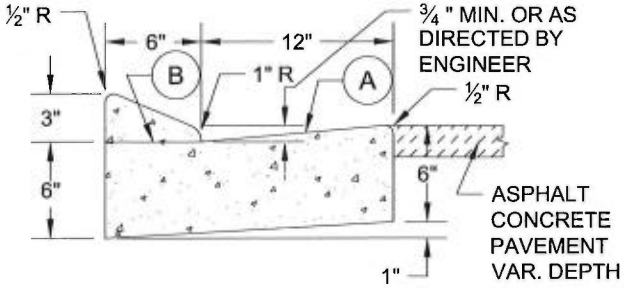

TYPE "D" MOUNTABLE CEMENT CONCRETE CURB & GUTTER

NOTES:

1. For trench crossings, curb and gutter shall be removed to a minimum 2' cut back over undisturbed soil.
2. In all projects, any remaining sections of curb and gutter less than 5' in length between the project area and the nearest control joint shall also be removed and replaced.
3. All joints shall be saw cut full depth prior to restoration and ⅜" expansion joint installed.
4. Concrete finish shall match existing.
5. Cutting wheel run-out beyond the limits of the opening shall be filled in accordance with WSDOT Standard Specification 5-05.3(8)B for cement concrete surfaces and 5-04.3(5)C for asphalt concrete surfaces.
6. Foundations shall be fully compacted prior to form placement.
7. Unsuitable foundation shall be replaced with ⅝" crushed surfacing top course.

REVIEWED BY			APPROVED FOR PUBLICATION	CITY OF TACOMA
DCS	GMS	KURTIS DEAN KINGSOLVER STATE OF WASHINGTON 38229 REGISTERED PROFESSIONAL ENGINEER	8/16/16	CEMENT CONCRETE CURB AND GUTTER
PUBLIC WORKS	ENVIRONMENTAL SERVICES		CITY ENGINEER — DATE	STANDARD PLAN NO. SU-03
NA	NA			
TACOMA POWER	TACOMA WATER			

NOTE:

(B) Flush with gutter pan at curb ramp entrance or ¾" vertical lip at driveway entrance.

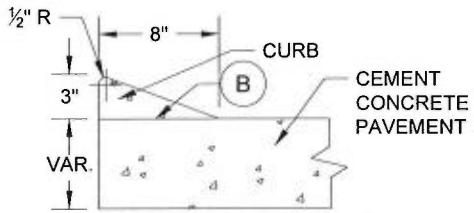

TYPE "C" MOUNTABLE INTEGRAL CEMENT CONCRETE CURB

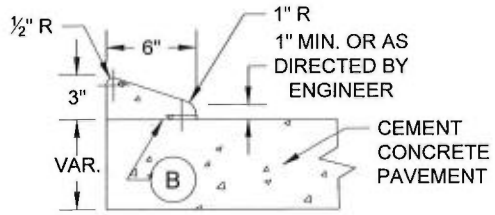

TYPE "D" MOUNTABLE INTEGRAL CEMENT CONCRETE CURB

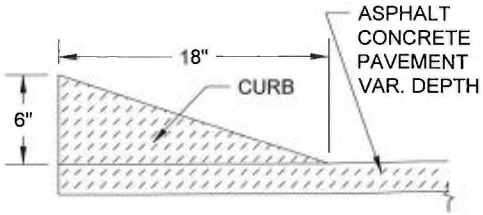

HMA WEDGE CURB DOWNHILL SIDE OF FULL STREET WARP

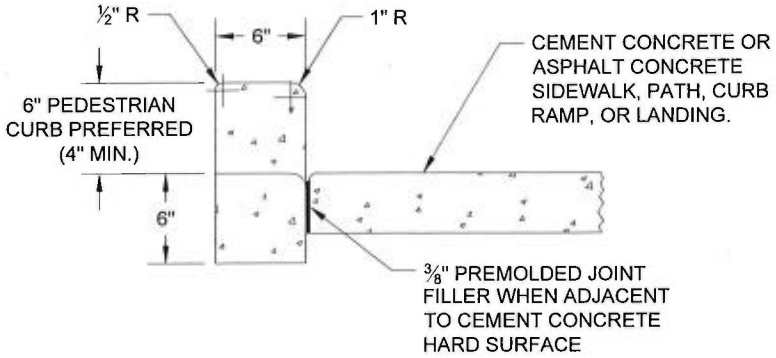

CEMENT CONCRETE PEDESTRIAN CURB

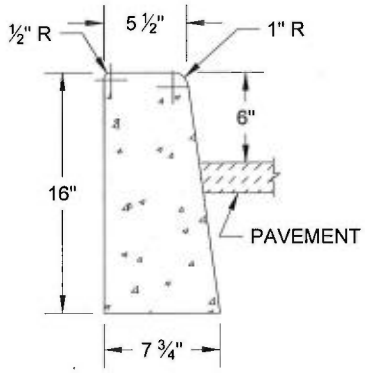

CEMENT CONCRETE TRAFFIC CURB

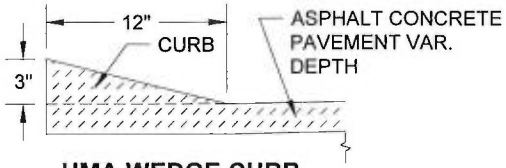

HMA WEDGE CURB STANDARD

NOTES:

1. For trench crossings, curb and gutter shall be removed to a minimum 2' cut back over undisturbed soil.
2. In all projects, any remaining sections of curb and gutter less than 5' in length between the project area and the nearest control joint shall also be removed and replaced.
3. All joints shall be saw cut full depth prior to restoration and ⅜" expansion joint installed.
4. Concrete finish shall match existing.
5. Cutting wheel run-out beyond the limits of the opening shall be filled in accordance with WSDOT Standard Specification 5-05.3(8)B for cement concrete surfaces and 5-04.3(5)C for asphalt concrete surfaces.
6. Foundations shall be fully compacted prior to form placement.
7. Unsuitable foundation shall be replaced with ⅝" crushed surfacing top course.

REVIEWED BY			APPROVED FOR PUBLICATION	CITY OF TACOMA CEMENT CONCRETE CURB AND GUTTER AND ASPHALT WEDGE CURB
DCS	GMS		8/16/16	
PUBLIC WORKS	ENVIRONMENTAL SERVICES		CITY ENGINEER / DATE	STANDARD PLAN NO. SU-03A
NA	NA			
TACOMA POWER	TACOMA WATER			

NOTES:

1. Sidewalks shall be designed and constructed in accordance with 2010 ADA Standards, 28 CFR, Part 35 and as supplemented by the Public Right of Way Accessibility Guidelines (PROWAG). City of Tacoma prefers sidewalk cross slopes to be designed to a maximum of 1.5% and a minimum of 1.0%
2. When placing walk adjacent to existing curb and gutter, curb and gutter will be repaired as necessary before placing concrete forms for walk.
3. Staking is required where no curb is present.
4. Thickened edge shall be constructed using cement concrete on all radii. All other locations shall be backfilled and compacted.
5. Combination walk shall be 7' min. on all commercial sites and arterial streets. Combination walk shall be a minimum of 5' on non arterial streets. Dimensions are from back of curb to back of walk. See contract plans for width and placement of sidewalk.
6. All expansion joints shall be full depth with ⅜" premolded joint filler.
7. All joints shall be cleaned and edged. External edges shall be ½" radius. Internal joints shall be ¼" radius.
8. All soft and yielding foundation material shall be removed and replaced with crushed surfacing top course (CSTC) per Section 9-03.9(3) of the WSDOT Standard Specifications.
9. All sidewalk shall be replaced to the nearest expansion or contraction joint. All joints shall be saw cut full depth prior to restoration and ⅜" expansion joint installed. Cutting wheel run-out beyond the limits of the opening shall be filled in accordance with WSDOT Standard Specification 5-05.3(8)B for cement concrete surfaces and 5-04.3(5)C for asphalt concrete surfaces.
10. For sidewalks within the North Slope Historical District area use Standard Plan HD-NS03. See Standard Plan HD-NS01 for North Slope Historic District site map.

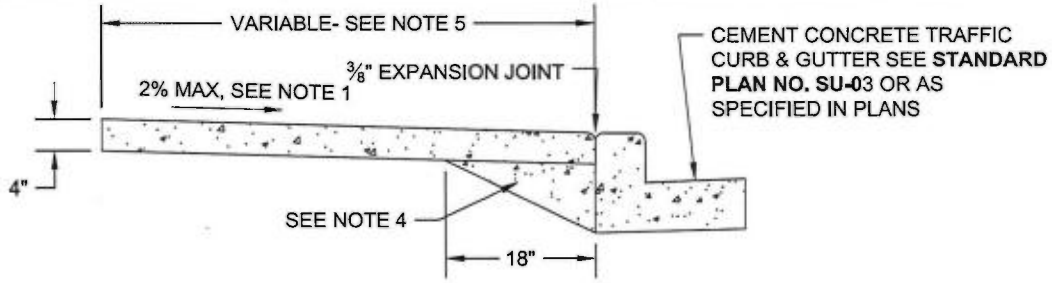

SECTION DETAIL A-A

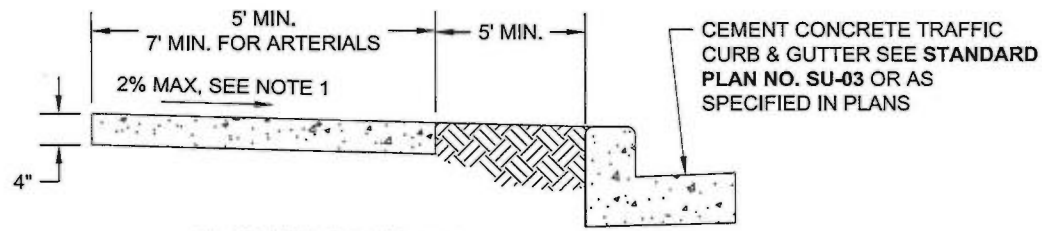

SECTION DETAIL B-B

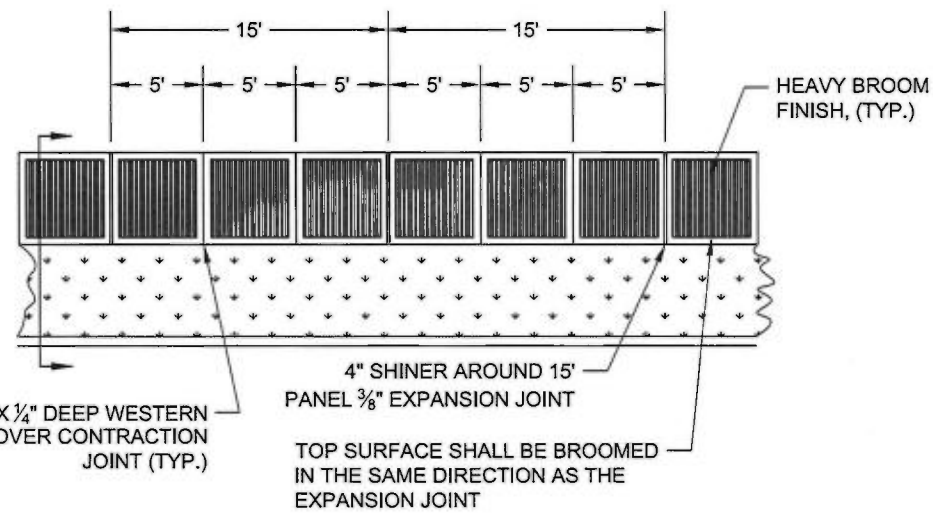

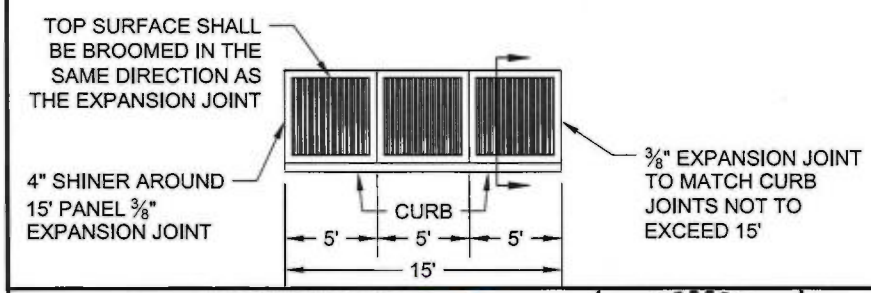

REVIEWED BY		APPROVED FOR PUBLICATION	CITY OF TACOMA
DCS PUBLIC WORKS	GMS ENVIRONMENTAL SERVICES	4/25/17 CITY ENGINEER — DATE	CEMENT CONCRETE SIDEWALK
N/A TACOMA POWER	N/A TACOMA WATER		STANDARD PLAN NO. SU-04

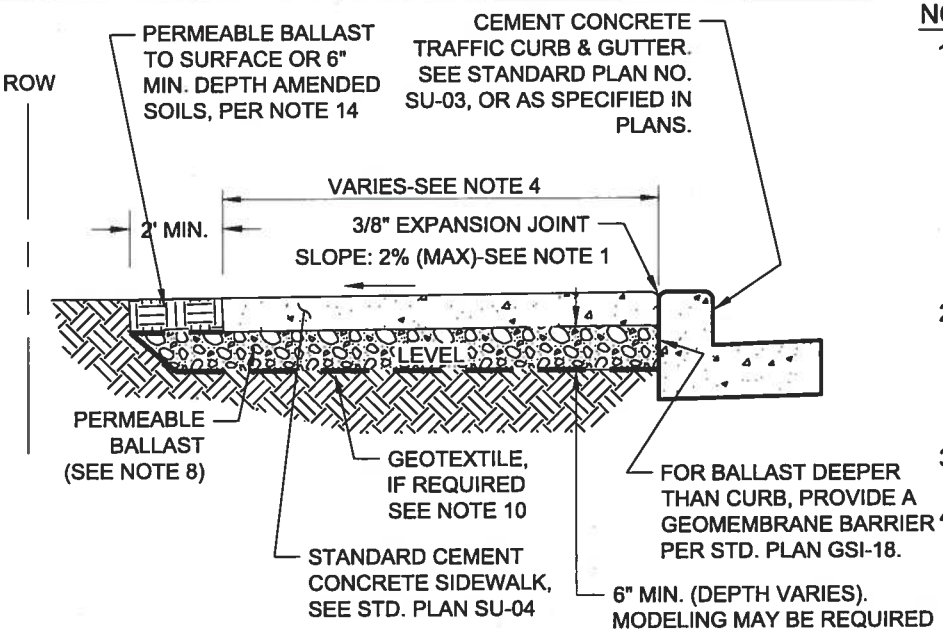

COMBINATION WALK SECTION

NTS

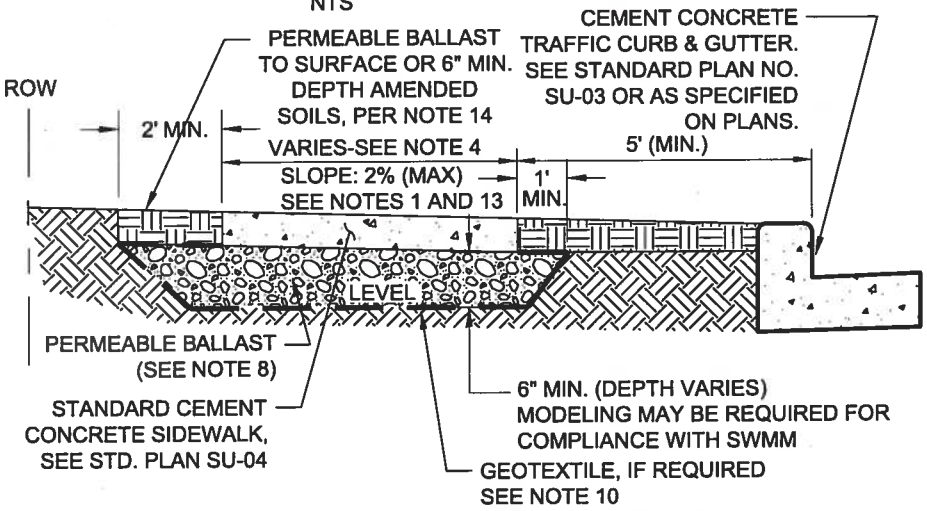

SIDEWALK WITH PLANTER STRIP SECTION

NTS

NOTES:

1. Sidewalks shall be designed and constructed in accordance with ADA standards for accessible design, 28 CFR, Part 35 and as supplemented by the public right of way accessibility guidelines (PROWAG). City of Tacoma prefers sidewalk cross slopes to be designed to a maximum of 1.5% and a minimum of 1.0%.
2. When placing walk adjacent to existing curb and gutter, curb and gutter will be repaired as necessary before placing concrete forms for walk per Right-of-Way Restoration Policy.
3. Staking is required where no curb is present.
4. Combination walk shall be 7' min. on all commercial sites and arterial streets. Combination walk shall be a minimum of 5' on non arterial streets. Dimensions are from back of curb to back of walk. See contract plans for width and placement of sidewalk.
5. All expansion joints shall be full depth with 3/8" premolded joint filler.
6. All joints shall be cleaned and edged. External edges shall be 1/2" radius. Internal joints shall be 1/4" radius.
7. Subgrade preparation shall meet APWA GSP 2-06.3(3) Subgrade for Permeable Pavements.
8. Permeable ballast shall meet APWA GSP 4-04.2 Gravel Base and 9-03.9(2).Opt1 Pavement Ballast.
9. All soft and yielding foundation material shall be removed and replaced with ballast per APWA GSP 4-04.2 Gravel Base and 9-03.9(2).Opt1 Permeable Ballast.
10. Geotextile fabric may be required between native soils or amended soils and permeable ballast per the recommendation of the geotechnical professional. Geotextile shall be per WSDOT 9.33.2(1), Tables 1 and 2, nonwoven, moderate survivability.
11. For sidewalks within the North Slope Historic District area use Standard Plan ND-NS03. See Standard Plan HD-NS01 for North Slope Historic District site map.
12. For plan view refer to City of Tacoma Standard Plan SU-04.
13. Sidewalk with planter strip may slope in either direction.
14. Planting strip soils shall be per BMP L613 (see Std. Plan GSI-01), if applicable; or scarify or till subgrade to 3 inch depth. Place 3-inches of topsoil on surface and till into 5-inches of site soil. Install 3-inches of arborist wood chip mulch or as specified on plans. Topsoil layer with a minimum organic matter content of 10% dry weight in planting beds, and 5% in turf areas, and a pH from 6.0 to 8.0 or matching the pH of the original undisturbed soil.
15. All disturbed areas not covered with hard surfaces shall be stabilized by planting or mulching.
16. Where needed, adjust ballast in planting strip to accommodate plants. Keep permeable ballast a minimum 2 feet from trunk of trees.
17. Where ballasted sidewalk is installed adjacent to permeable roadway, the permeable ballast may extend from the sidewalk to the roadway section. See Std. Plan SU-31b.
18. Refer to Std. Plan SU-32 for subgrade terracing, as applicable.

REVIEWED BY			APPROVED FOR PUBLICATION	CITY OF TACOMA BALLASTED CEMENT CONCRETE SIDEWALK
DCS	GMS	KURTIS DEAN KINGSOLVER, STATE OF WASHINGTON, 31229, REGISTERED PROFESSIONAL ENGINEER		
PUBLIC WORKS	ENVIRONMENTAL SERVICES		CITY ENGINEER — DATE	STANDARD PLAN NO. SU-04a
NA	NA			
TACOMA POWER	TACOMA WATER			

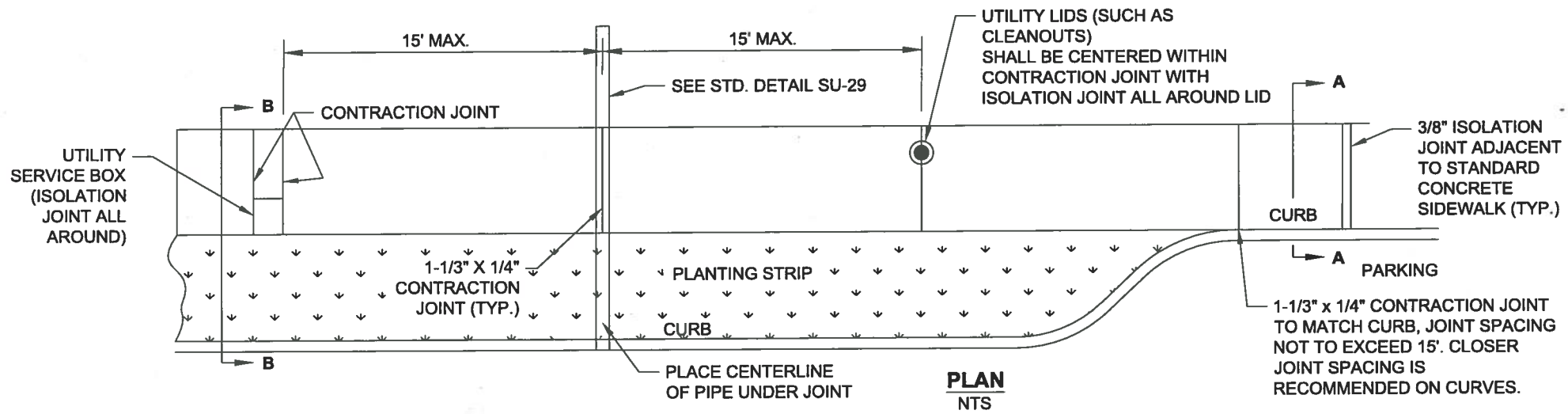

PLAN
NTS

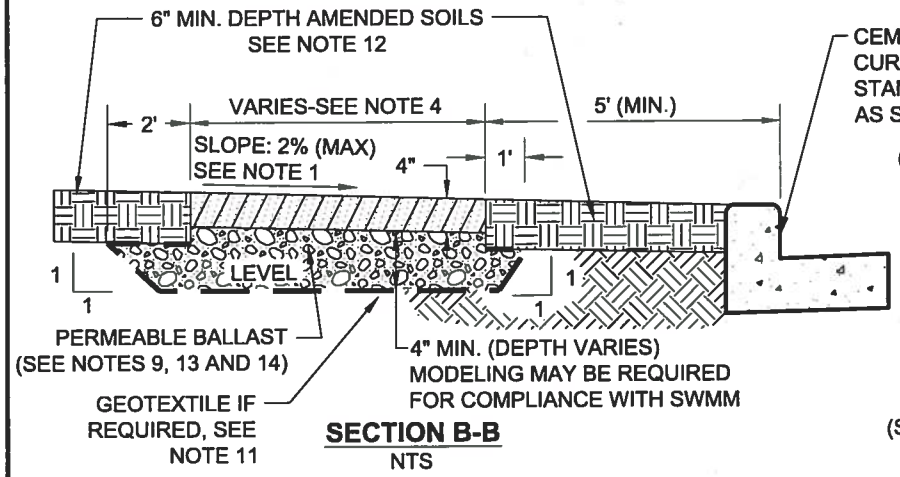

SECTION B-B
NTS

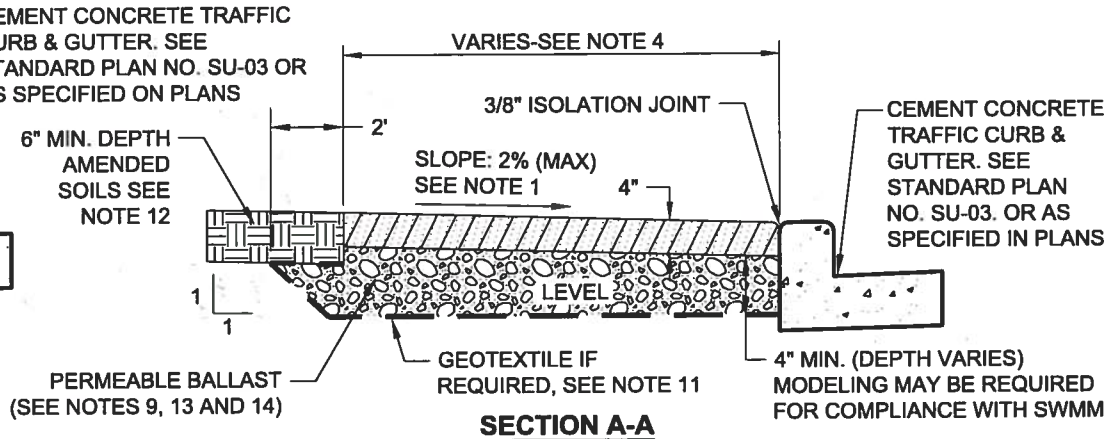

SECTION A-A
NTS

NOTES:

1. See SU-04b(2) for Notes.

REVIEWED BY			APPROVED FOR PUBLICATION	CITY OF TACOMA
DCS PUBLIC WORKS	GMS ENVIRONMENTAL SERVICES	KURTIS DEAN KINGSOLVER STATE OF WASHINGTON 31229 REGISTERED PROFESSIONAL ENGINEER	4/4/16 CITY ENGINEER DATE	PERVIOUS CONCRETE SIDEWALK
NA TACOMA POWER	NA TACOMA WATER			STANDARD PLAN NO. SU-04b(1)

NOTES:

1. Sidewalks shall be designed and constructed in accordance with ADA standards for accessible design, 28 CFR, Part 35 and as supplemented by the public right of way accessibility guidelines (PROWAG). City of Tacoma prefers sidewalk cross slopes to be designed to a maximum of 1.5% and a minimum of 1.0%.
2. When placing walk adjacent to existing curb and gutter, curb and gutter will be repaired as necessary before placing concrete forms for walk per Right-of-Way Restoration Policy.
3. Staking is required where no curb is present.
4. Combination walk shall be 7' min. on all commercial sites and arterial streets. Combination walk shall be a minimum of 5' on non arterial streets. Dimensions are from back of curb to back of walk. See contract plans for width and placement of sidewalk.
5. All isolation joints shall be full depth with 3/8" premolded joint filler.
6. All joints shall be clean and edged. Joint edges shall be 1/2" radius.
7. Subgrade preparation shall meet APWA GSP 2-06.3(3) Subgrade for Permeable Pavements.
8. All soft and yielding foundation material shall be removed and replaced with ballast per APWA GSP 4-04.2 Gravel Base and 9-03.9(2).Opt1 Permeable Ballast.
9. Permeable ballast shall meet APWA GSP 4-04.2 Gravel Base and 9-03.9(2).Opt1 Permeable Ballast.
10. All pervious surfaces shall be vacuumed immediately after completion of sawcutting to prevent clogging per Std. Detail SU-14F.
11. Geotextile fabric may be required between native soils and permeable ballast per the recommendation of the geotechnical professional. Geotextile shall be per WSDOT 9.33.2(1) Tables 1 and 2, nonwoven, moderate survivability.
12. Planting strip soils shall be per BMP L613 (see Std. Plan GSI-01), if applicable; or scarify or till subgrade to 3 inch depth. Place 3 inches of topsoil on surface and till into 5-inches of site soil. Install 3-inches of arborist wood chip mulch or as specified on plans. Topsoil layer with a minimum organic matter content of 10% dry weight in planting beds, and 5% in turf areas, and a pH from 6.0 to 8.0 or matching the pH of the original undisturbed soil.
13. Where needed, adjust ballast in planting strip to accommodate plants. Keep permeable ballast a minimum 2 feet from trunk of trees.
14. For ballast deeper than curb, provide a geomembrane barrier per Std. Plan GSI-18 between permeable ballast and road section unless adjacent road is permeable.
15. All disturbed areas not covered with hard surfaces shall be stabilized by planting or mulching.
16. For sidewalks within the North Slope Historic District area, use Std. Plan HD-NS03. See Std. Plan HD-NS01 for North Slope Historic District site map.
17. Refer to Std. Plan SU-32 for subgrade terracing, as applicable.

REVIEWED BY			APPROVED FOR PUBLICATION	CITY OF TACOMA
DCS PUBLIC WORKS	GMS ENVIRONMENTAL SERVICES	KURTIS DEAN KINGSOLVER STATE OF WASHINGTON 31229 REGISTERED PROFESSIONAL ENGINEER	4/4/16 CITY ENGINEER DATE	PERVIOUS CONCRETE SIDEWALK
NA TACOMA POWER	NA TACOMA WATER			STANDARD PLAN NO. SU-04b(2)

GENERAL NOTES:

1. Provide a separate directional curb ramp for each marked or unmarked crosswalk. Directional curb ramps are preferred over 45 degree ramps. Curb ramp location shall be placed within the width of the associated crosswalk, or as shown on the Contract Plans. The curb ramp centerline shall be parallel to the direction of the crossing. Forty-five (45) degree curb ramps shall be installed only after approval by the City's ADA Coordinator or the Street Operations Division Manager.
2. Where "GRADE BREAK" is called out, the entire length of the grade break between the two adjacent surface planes shall be flush and perpendicular to the direction of travel. There shall be no vertical discontinuity between the base of curb ramp and gutter line.
3. Do not place grates, junction boxes, access covers, or other appurtenances in front of the curb ramp or on any part of the curb ramp or turning space. Placement on or in front of ramp flares is allowed.
4. See Contract Plans for the curb design specified. See **Standard Plan SU-03** and **SU-03A** for Curb, and Curb and Gutter Details.
5. A thickened edge shall be constructed to full depth of adjacent curb along entire curb radius.
6. For sidewalk and curb ramps within the North Slope Historical District area see **North Slope Historic District Site Map, HD-NS01.** Apply Lamp Black 1lb. per cubic yard of cement concrete or as required for discoloration in accordance with ASTM D209-81 Standard Specifications for Lamp Black pigment.
7. The running slope of a curb ramp shall not exceed 8.3% but does not require the ramp length to exceed 15 feet to avoid chasing the slope indefinitely when connecting to steep grades.
8. Curb ramp, turning space and flares shall receive a broom finish, see **WSDOT Standard Specifications 8-14**.
9. Return curbs, (pedestrian curbs), may only be used with landscaping or railing. Return curbs, (pedestrian curbs), shall not be used to prevent pedestrians from crossing streets.
10. All curb ramp designs shall be stamped by a Washington State licensed Professional Engineer. If meeting the current design standards is not possible, curb ramps shall be constructed to the maximum extent feasible as indicated by an Engineer's note on the stamped drawings. Rationale supporting the design variance shall be provided by the Engineer and shall include a description of the scope of work, the site-specific factors affecting compliance, and the measures implemented to improve compliance.
11. Pedestrian traffic should be aligned to the receiving curb ramp. The existing curb ramps shall be evaluated using criteria in the City's Curb Ramp Installation Matrix.
12. Consult the City's Curb Ramp Installation Matrix and the Right Of Way Restoration Policy for additional requirements.
13. Conduit for APS equipment shall be installed during curb ramp construction at all signalized intersections and at intersections where signalization is anticipated within the next 6 years. Coordinate with Public Works - Engineering, Traffic Section.
14. A Pedestrian Accessibility Control Plan shall be developed in conjunction with each project-specific Temporary Traffic Control Plan for all work in the ROW.
15. Pedestrian traffic shall NOT be directed behind the stop bar.
16. Curb ramp alignment should be consistent with crosswalk alignment
17. Curb ramp shall be 5' minimum in width.
18. Catch basins shall be located upstream of curb ramps outside of flare/wing for new construction or when performing storm sewer upgrades.
19. For constructability purposes, the City recommends designing to **less than** the maximum allowable slopes.

REVIEWED BY			APPROVED FOR PUBLICATION	CITY OF TACOMA
DCS PUBLIC WORKS	GMS ENVIRONMENTAL SERVICES	KURTIS DEAN KINGSOLVER STATE OF WASHINGTON 38289 REGISTERED PROFESSIONAL ENGINEER	8/16/16 CITY ENGINEER DATE	CURB RAMP DETAILS GENERAL INFORMATION
NA TACOMA POWER	NA TACOMA WATER			STANDARD PLAN NO. SU-05

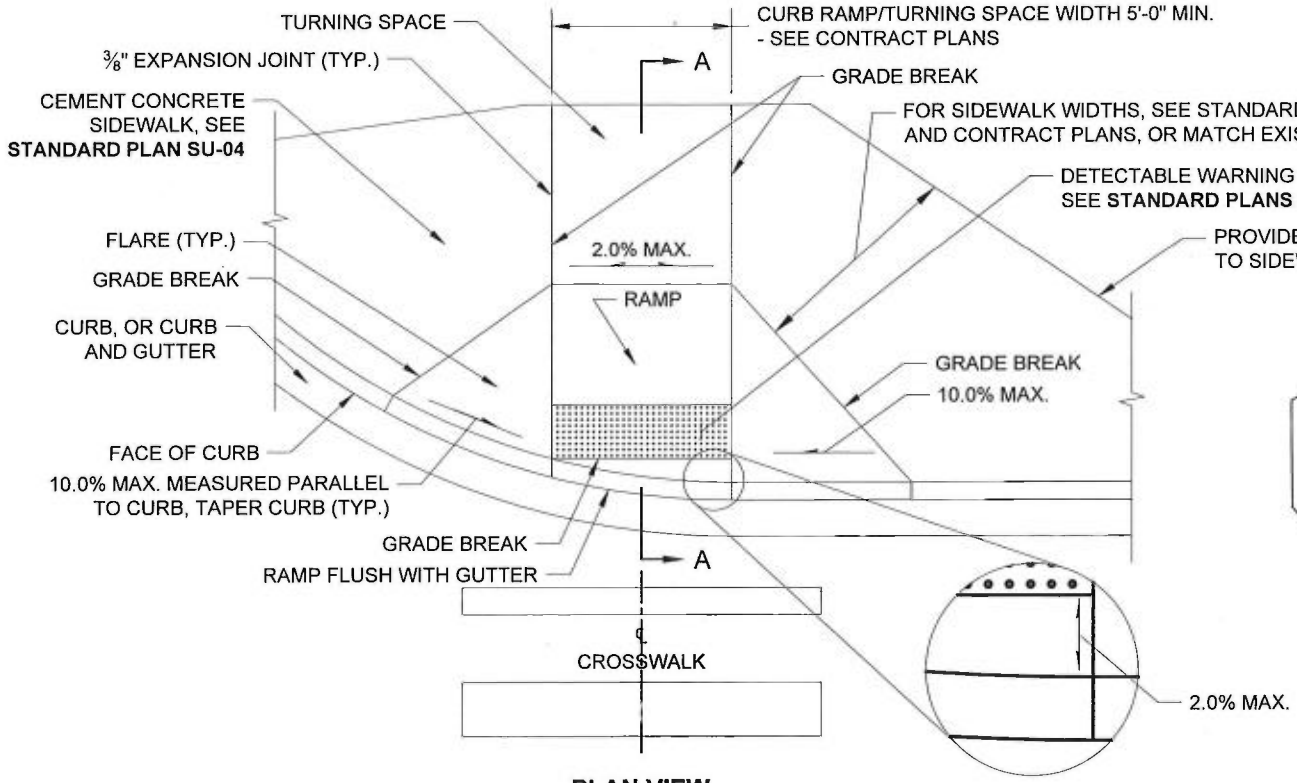

PLAN VIEW

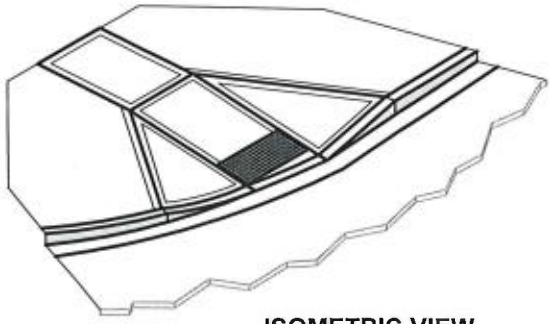

ISOMETRIC VIEW

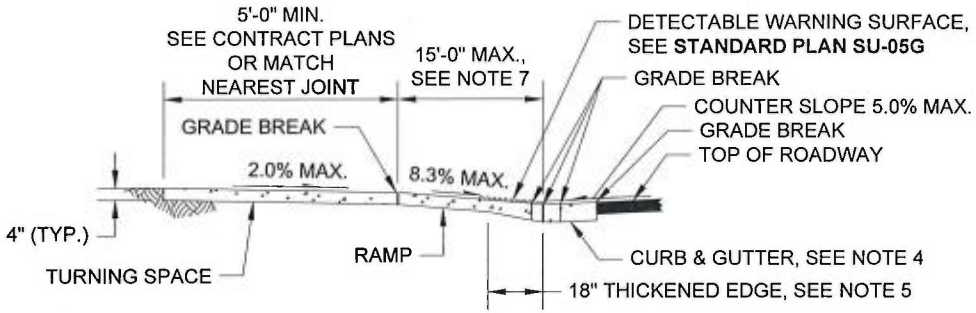

SECTION DETAIL A-A

NOTES:

See **Standard Plan SU-05** for referenced notes

LEGEND

SLOPE IN EITHER DIRECTION

REVIEWED BY		APPROVED FOR PUBLICATION	CITY OF TACOMA
DCS	GMS	8/16/16	PERPENDICULAR CURB RAMP TYPE 'A'
PUBLIC WORKS	ENVIRONMENTAL SERVICES	CITY ENGINEER / DATE	STANDARD PLAN NO. SU-05A
NA	NA		
TACOMA POWER	TACOMA WATER		

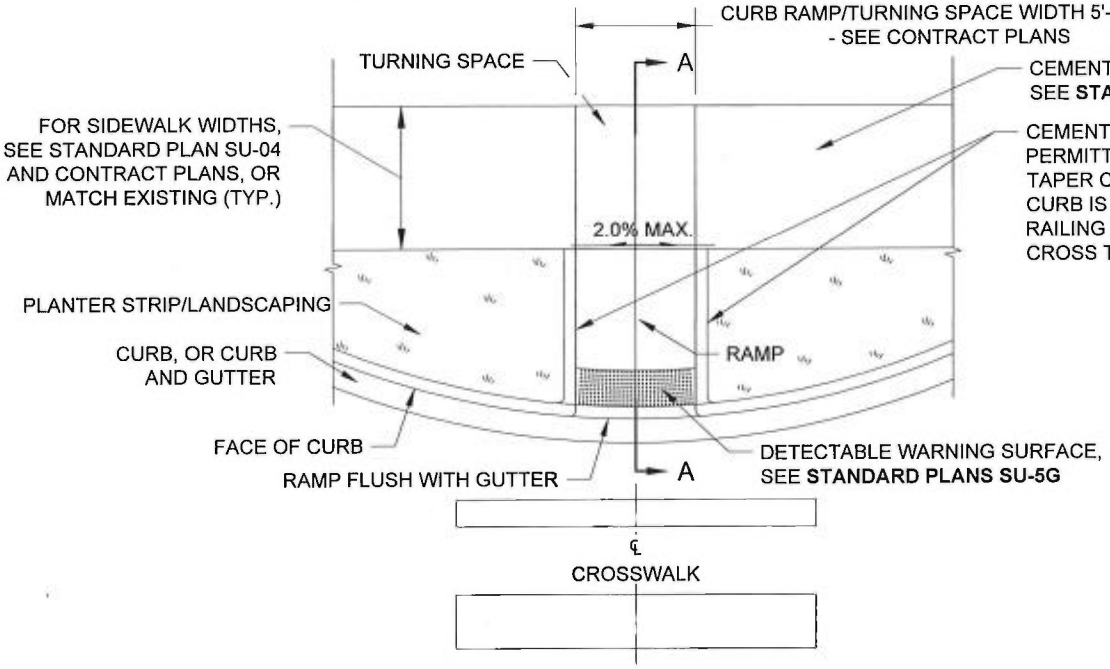

PLAN VIEW
(SHOWN WITH PLANTER STRIP/LANDSCAPING)

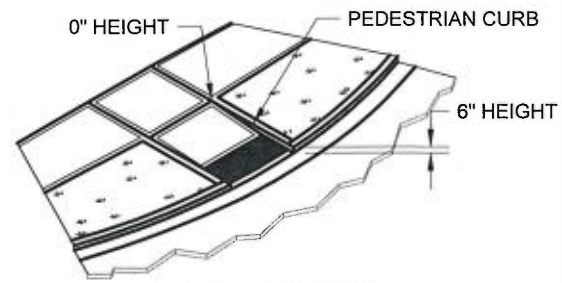

ISOMETRIC VIEW
(SHOWN WITH PLANTER STRIP/LANDSCAPING)

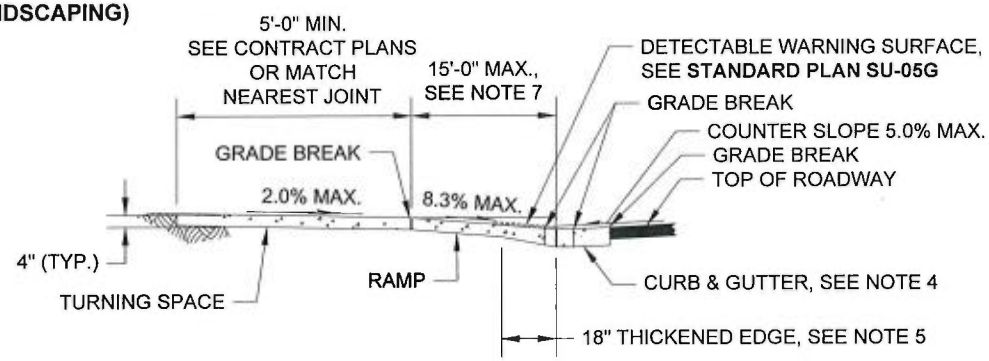

SECTION DETAIL A-A

NOTES:

See **Standard Plan SU-05** for referenced notes

LEGEND

SLOPE IN EITHER DIRECTION

REVIEWED BY			APPROVED FOR PUBLICATION	CITY OF TACOMA
DCS	GMS		8/16/16	PERPENDICULAR CURB RAMP TYPE 'B'
PUBLIC WORKS	ENVIRONMENTAL SERVICES		CITY ENGINEER — DATE	STANDARD PLAN NO. SU-05B
NA	NA			
TACOMA POWER	TACOMA WATER			

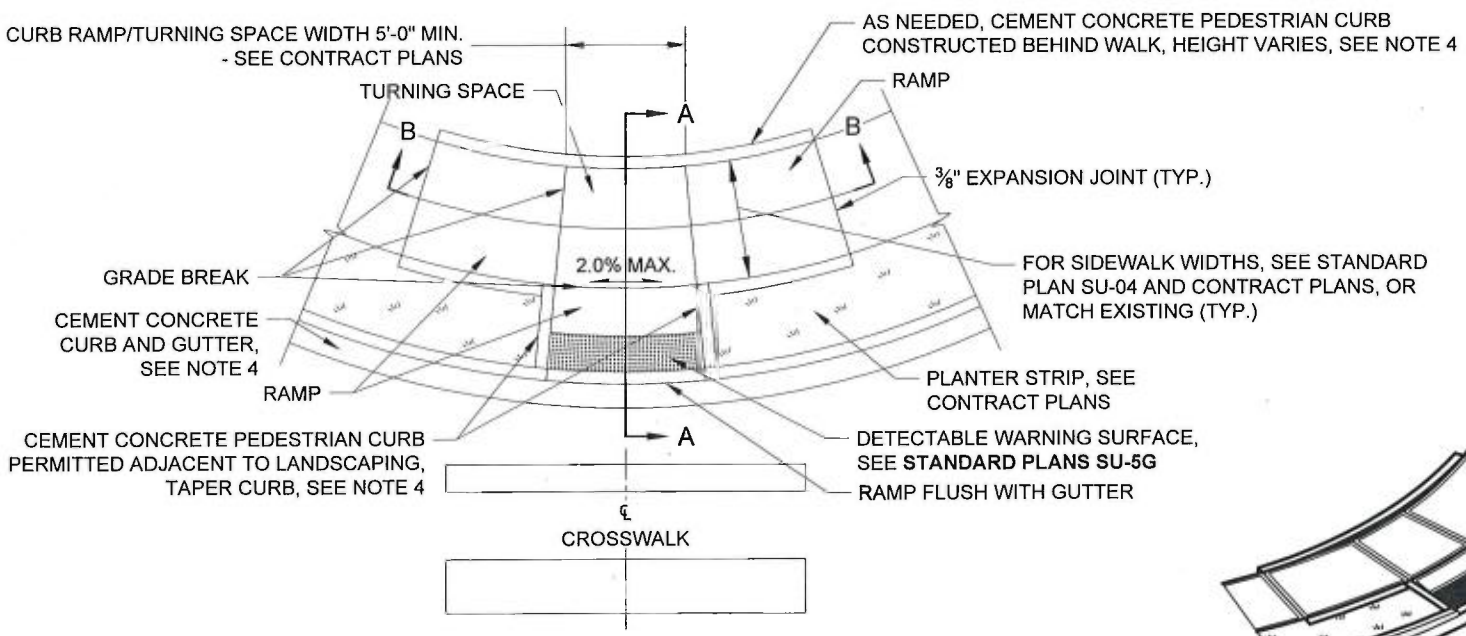

PLAN VIEW
(WITH PLANTER STRIP/LANDSCAPING)

NOTES:

See **Standard Plan SU-05** for referenced notes

LEGEND

SLOPE IN EITHER DIRECTION

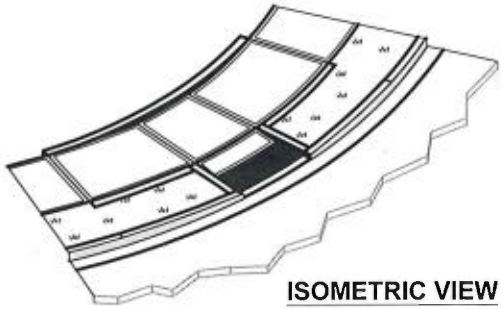

ISOMETRIC VIEW

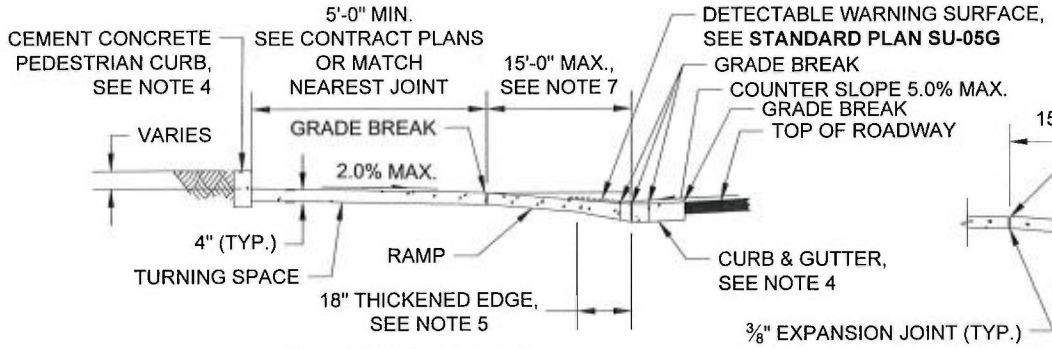

SECTION DETAIL A-A

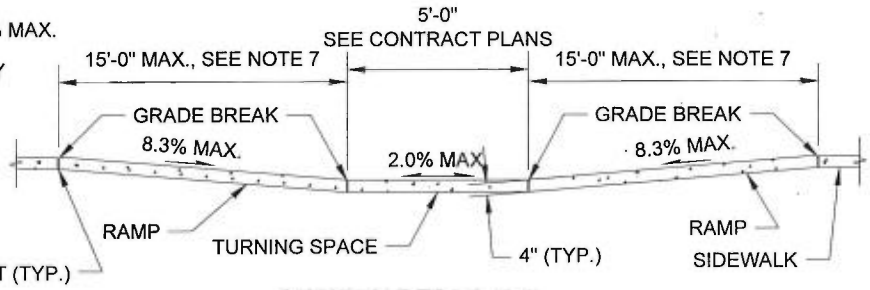

SECTION DETAIL B-B

REVIEWED BY			APPROVED FOR PUBLICATION	CITY OF TACOMA
DCS PUBLIC WORKS	GMS ENVIRONMENTAL SERVICES	KURTIS DEAN KINGSOLVER, STATE OF WASHINGTON, 38229, REGISTERED PROFESSIONAL ENGINEER	8/16/16 CITY ENGINEER DATE	COMBINATION CURB RAMP
NA TACOMA POWER	NA TACOMA WATER			STANDARD PLAN NO. SU-05C

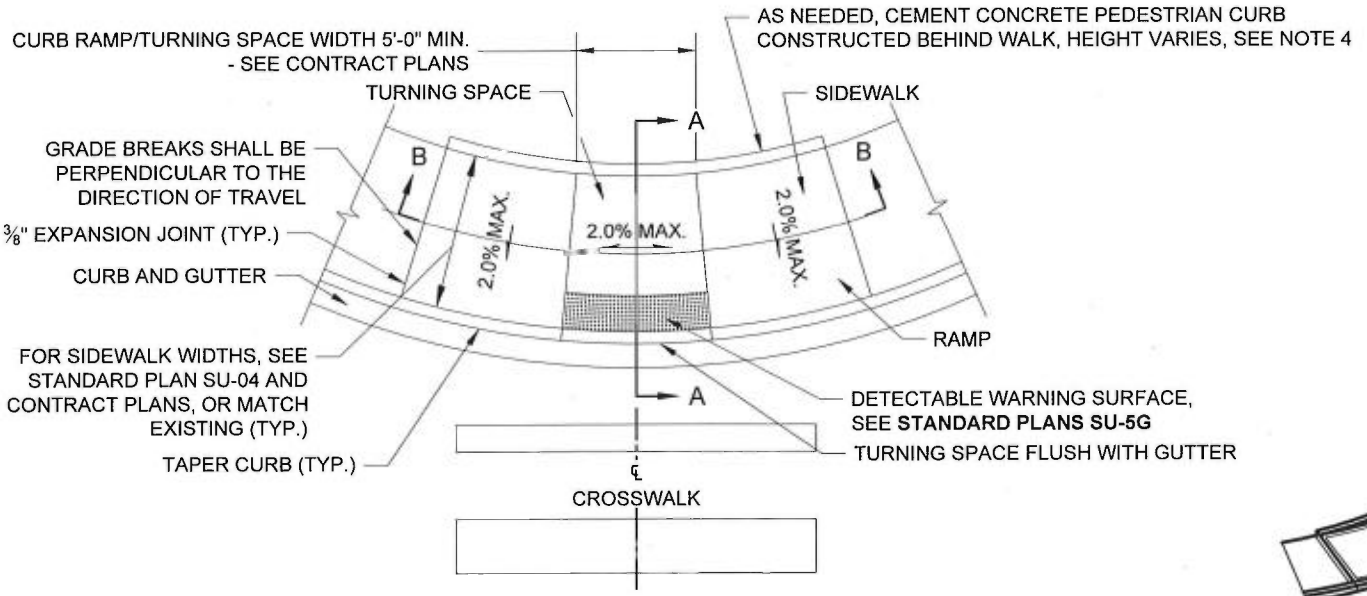

PLAN VIEW

NOTES:

See **Standard Plan SU-05** for referenced notes

LEGEND

SLOPE IN EITHER DIRECTION

ISOMETRIC VIEW

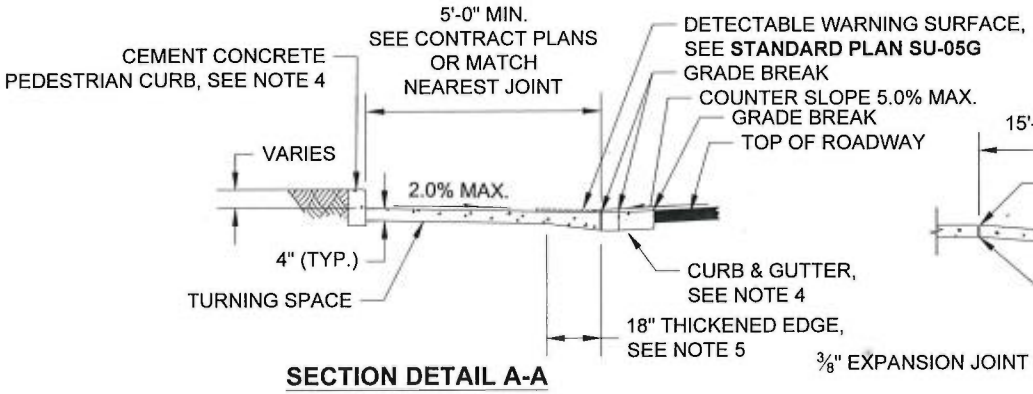

SECTION DETAIL A-A

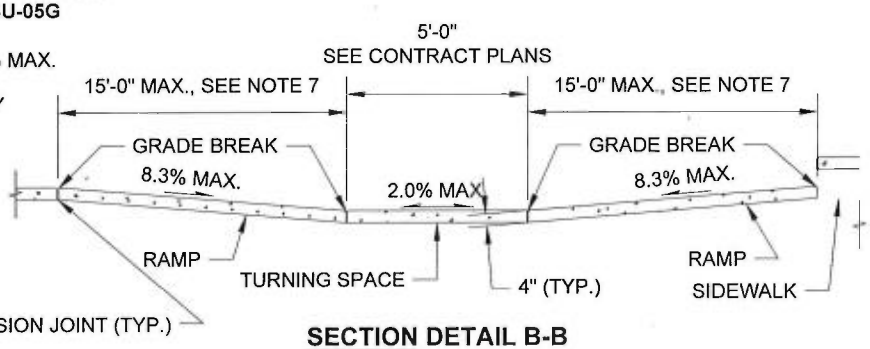

SECTION DETAIL B-B

REVIEWED BY			APPROVED FOR PUBLICATION	CITY OF TACOMA
DCS	GMS		8/16/16	PARALLEL CURB RAMP TYPE 'A'
PUBLIC WORKS	ENVIRONMENTAL SERVICES		CITY ENGINEER — DATE	STANDARD PLAN NO. SU-05D
NA	NA			
TACOMA POWER	TACOMA WATER			

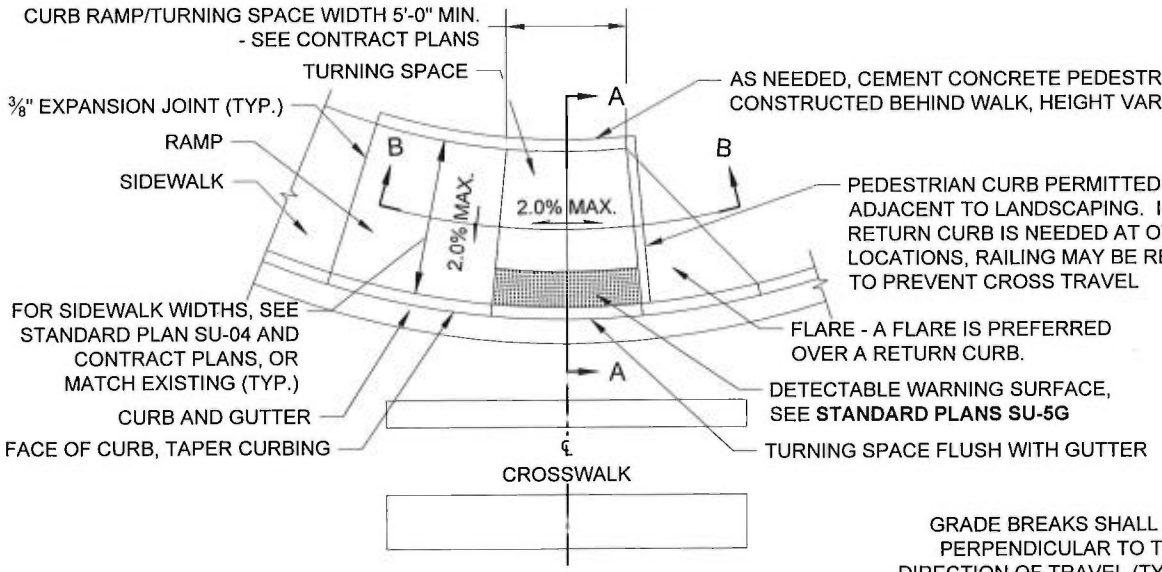

PLAN VIEW

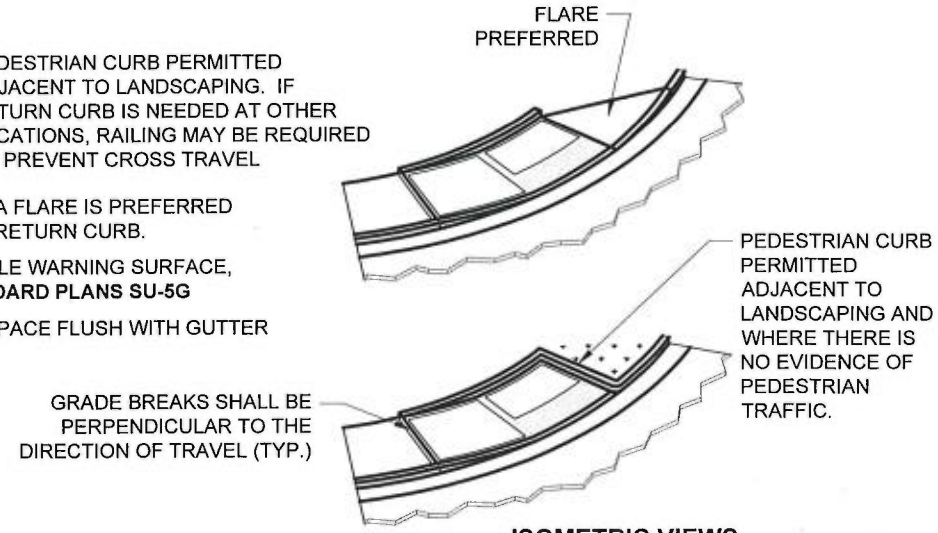

ISOMETRIC VIEWS

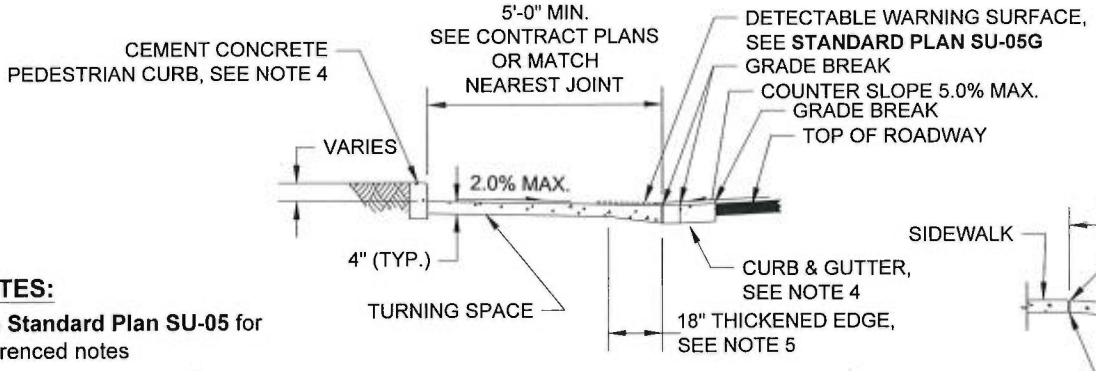

SECTION DETAIL A-A

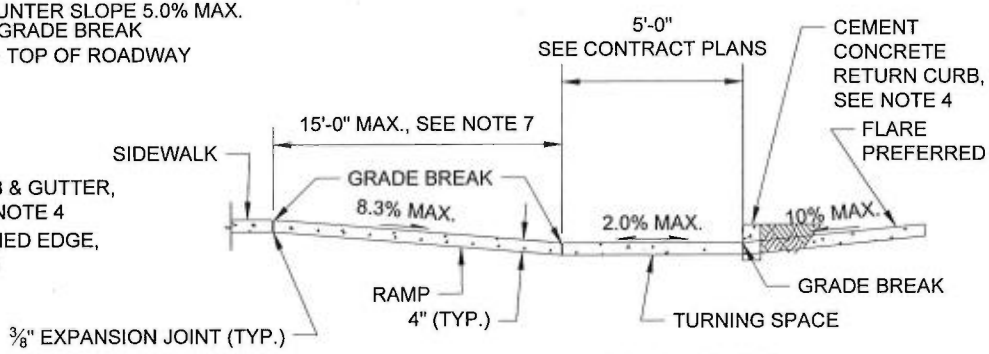

SECTION DETAIL B-B

NOTES:

See **Standard Plan SU-05** for referenced notes

LEGEND

SLOPE IN EITHER DIRECTION

DCS REVIEWED BY GMS		APPROVED FOR PUBLICATION	CITY OF TACOMA
PUBLIC WORKS	ENVIRONMENTAL SERVICES	8/16/16	PARALLEL CURB RAMP TYPE 'B'
NA	NA		
TACOMA POWER	TACOMA WATER	CITY ENGINEER / DATE	STANDARD PLAN NO. SU-05E

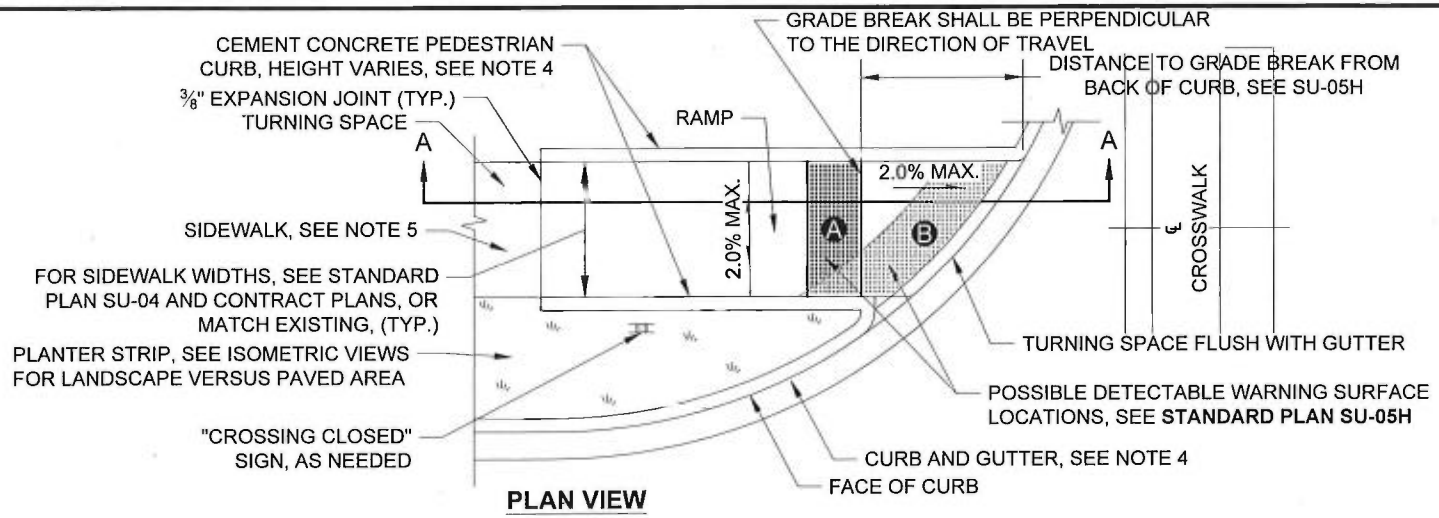

PLAN VIEW

NOTES:

See **Standard Plan SU-05** for referenced notes

LEGEND

SLOPE IN EITHER DIRECTION

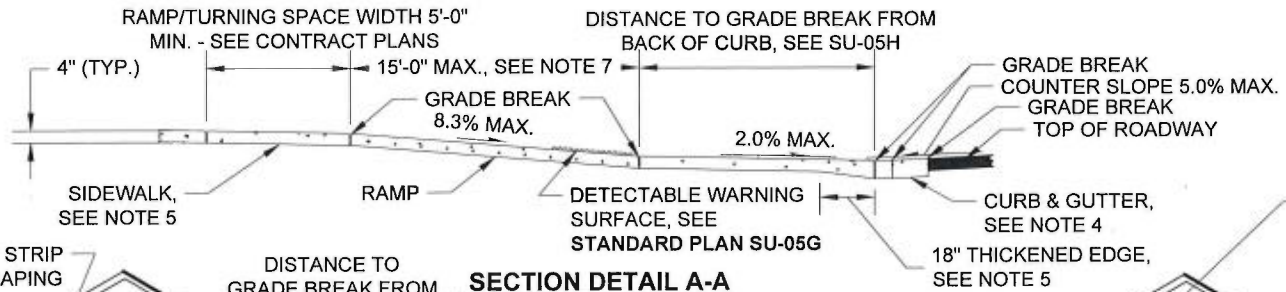

SECTION DETAIL A-A

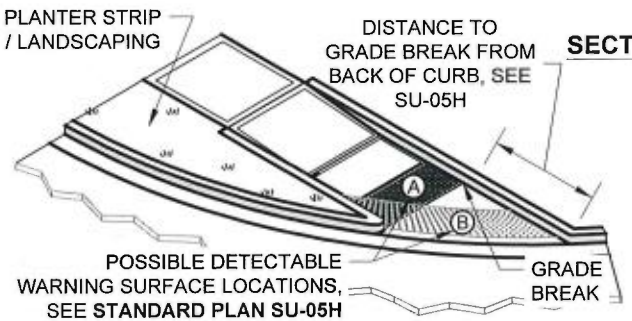

ISOMETRIC VIEW
(SHOWN WITH PLANTER STRIP/LANDSCAPING)

HARDSCAPED BUFFER SHALL BE DARK GRAY COLORED CEMENT CONCRETE OR HAVE A PATTERN TO INDICATE THE AREA IS OUTSIDE THE PEDESTRIAN ACCESS ROUTE. THE PATTERN SHALL BE SUBMITTED AND APPROVED BY THE CITY, PRIOR TO CONSTRUCTION. ALTERNATE COLORS MAY BE USED WITH PRIOR WRITTEN APPROVAL BY THE CITY'S ADA COORDINATOR PRIOR TO CONSTRUCTION.

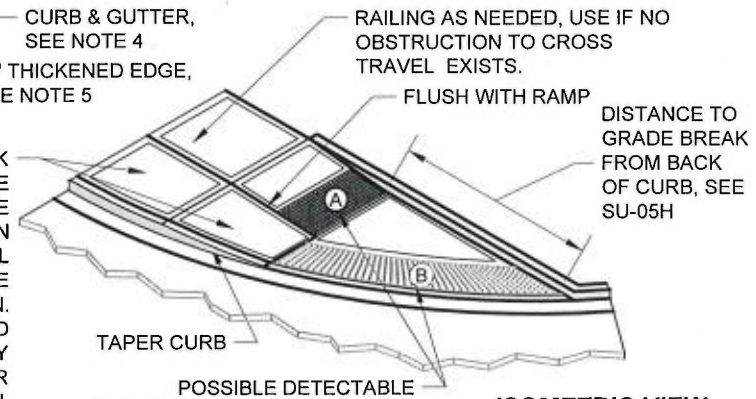

ISOMETRIC VIEW
(SHOWN WITH PAVED STRIP)

REVIEWED BY		APPROVED FOR PUBLICATION	CITY OF TACOMA
DCS PUBLIC WORKS	GMS ENVIRONMENTAL SERVICES	8/16/16 CITY ENGINEER — DATE	SINGLE DIRECTION CURB RAMP
NA TACOMA POWER	NA TACOMA WATER		STANDARD PLAN NO. SU-05F

NOTES

1. The Detectable Warning Surface shall extend the full width of the curb ramp (exclusive of flares).
2. The rows of truncated domes in a Detectable Warning Surface shall be parallel with the direction of wheelchair travel.
3. See **Standard Plans SU-04** through **SU-05F** for sidewalk and curb ramp details.
4. If a curb is not present, place the Detectable Warning Surface at the edge of the pavement.
5. Detectable Warning Surfaces shall be either cast-in-place from Armor Tile, ADA Solutions, or an approved equal or surface applied from Vanguard or an approved equal. No detectable warning fasteners such as glue, bolts, or screws are allowed. Surface applied detectable warning surfaces may be used only when the curb ramp has associated features to deter vehicles from driving over the ramp area. Examples of such features include pedestrian curbing, utility/signal/streetlight poles, and fire hydrants.
6. Detectable warning surface shall be yellow and shall match SAE AMS Standard 595, Color 33538.
7. See **Standard Plan SU-05H** for Detectable Warning Surface placement guidelines.

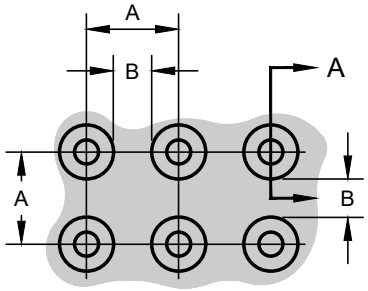

TRUNCATED DOME DETAILS

TRUNCATED DOME SPACING

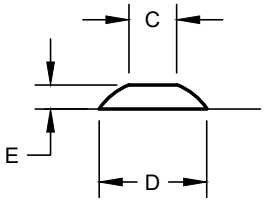

	MIN.	MAX.
A	1.60"	2.40"
B	0.65"	-
C	0.45"	0.90"
D	0.90"	1.40"
E	0.20"	0.20"

SECTION DETAIL A-A

TRUNCATED DOME

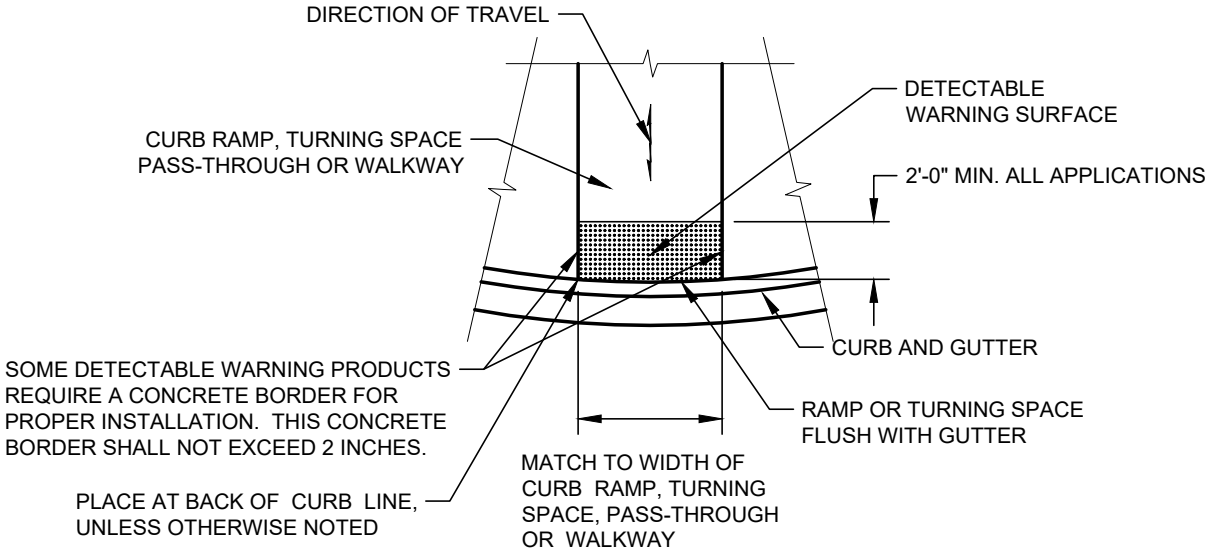

DETECTABLE WARNING SURFACE DETAIL

RVDR PUBLIC WORKS TACOMA POWER	REVIEWED BY EW ENVIRONMENTAL SERVICES TS TACOMA WATER	APPROVED FOR PUBLICATION kurtis kingsolver 04/19/2021 CITY ENGINEER DATE	CITY OF TACOMA DETECTABLE WARNING SURFACE DETAILS STANDARD PLAN NO. SU-05G

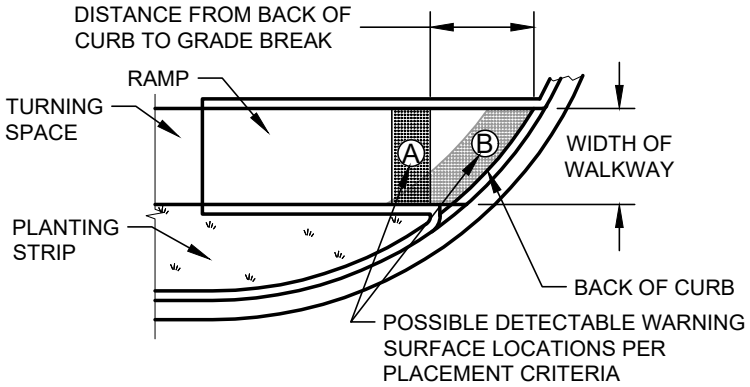

SINGLE DIRECTION CURB RAMP

DETECTABLE WARNING PLACEMENT CRITERIA FOR SINGLE DIRECTIONAL CURB RAMP

USE LOCATION Ⓐ IF DISTANCE FROM BACK OF CURB TO GRADE BREAK IS LESS THAN OR EQUAL TO 5 FT.

USE LOCATION Ⓑ IF DISTANCE FROM BACK OF CURB TO GRADE BREAK IS GREATER THAN 5 FT.

NOTES

1. The Detectable Warning Surface shall extend the full width of the curb ramp (exclusive of flares).
2. The edge of the Detectable Warning Surface shall be placed along the back of the curb line unless otherwise noted.
3. The Detectable Warning Surface shall be within 2" (max.) of the edge of the ramp.
4. The rows of truncated domes in the Detectable Warning Surface shall be parallel with the direction of travel.
5. See Standard Plans for sidewalk and curb ramp details.
6. If a curb is not present, place the Detectable Warning Surface at the edge of the pavement.
7. See Standard Plan SU-05G for Detectable Warning Surface Details.

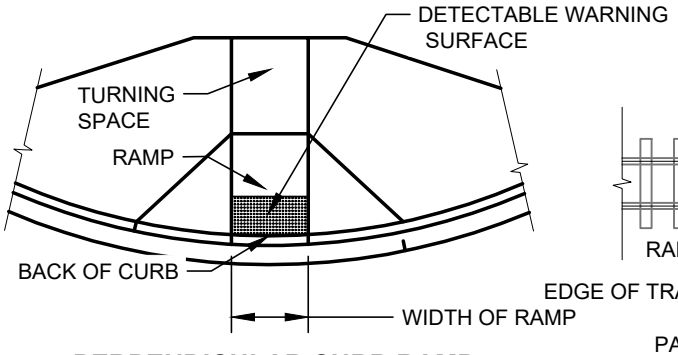

PERPENDICULAR CURB RAMP

(SEE SU-05A AND SU-05B)

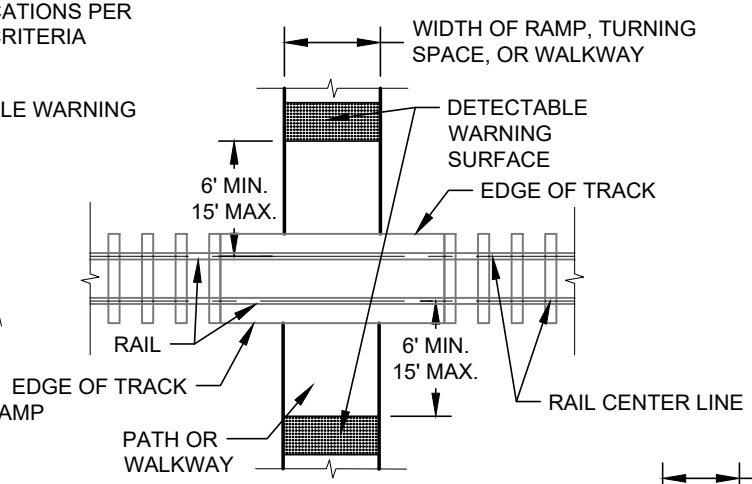

PEDESTRIAN RAILROAD CROSSING

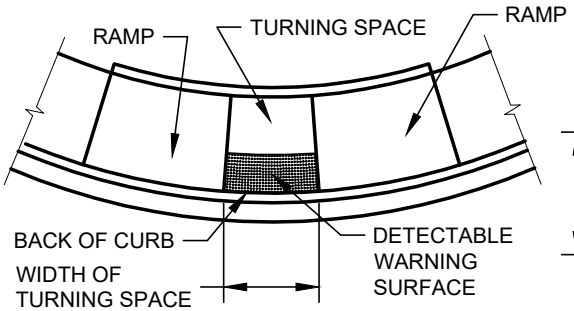

PARALLEL CURB RAMP

(SEE SU-05C, SU-05D, AND SU-05E)

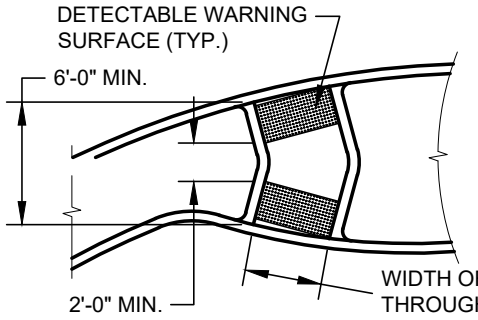

ROUNDABOUT SPLITTER ISLAND

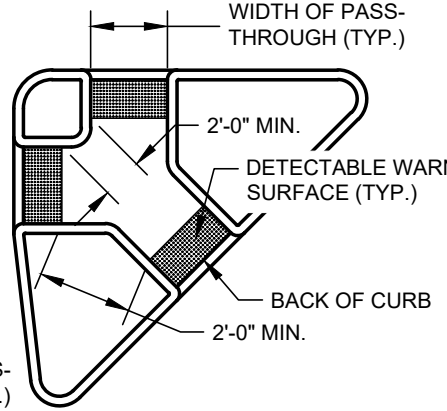

ISLAND PASS-THROUGH

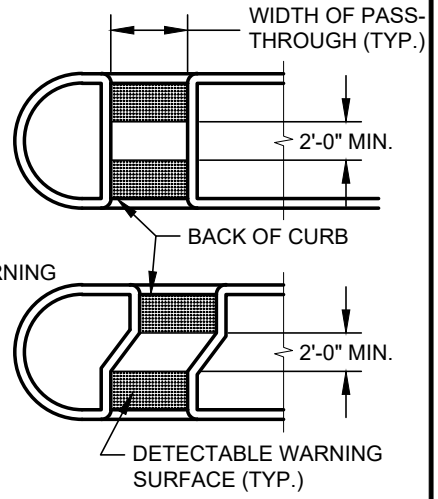

MEDIAN PASS-THROUGH

RVDR REVIEWED BY EW		APPROVED FOR PUBLICATION	CITY OF TACOMA
PUBLIC WORKS	ENVIRONMENTAL SERVICES	kurtis kingsolver 04/19/2021	DETECTABLE WARNING SURFACE PLACEMENT GUIDELINES
TACOMA POWER	TACOMA WATER	CITY ENGINEER DATE	STANDARD PLAN NO. SU-05H

KURTIS DEAN KINGSOLVER STATE OF WASHINGTON 31229 REGISTERED PROFESSIONAL ENGINEER

NOTES

1. The clearance between the face of curb and any obstruction, except mail boxes, shall be a minimum of 1'-6" and shall be in accordance with applicable standards. The front of a mail box shall be 6" to 8" from the face of curb.
2. Sidewalk cafes, artwork, poles, mailboxes, vault lids, ramps, etc., may not reduce the width of the sidewalk to less than 5' for residential streets and 7' for arterial streets and commercial areas, excluding the curb width.
3. All obstructions shall meet requirements for cane detection. See City of Tacoma Design Manual Chapter 8.
4. The following criteria shall only be used in rare circumstance when an obstruction cannot be relocated and does not allow the minimum required sidewalk width:
   a) If the sidewalk is new or replaced and cannot meet the minimum clearance requirements due to an existing obstruction, then a maximum extent feasible (MEF) justification shall be included in the Plans. Rationale supporting the MEF shall be provided by the Engineer and shall include a description of the scope of work, the site-specific factors affecting compliance, and the measures implemented to improve compliance. The MEF shall be submitted and approved by the City of Tacoma Traffic Engineering Division and ADA Coordinator prior to requesting project bids or permit approval.
   b) When placing a new obstruction in an existing sidewalk and the minimum clearance requirements cannot be met, a MEF shall be submitted and approved by the City of Tacoma Traffic Engineering Division and ADA Coordinator prior to requesting project bids or permit approval.
5. See Tacoma's Design Manual Chapter 8, Pedestrian Facilities, for additional information on Pedestrian Access Routes (PARs).
6. Sidewalk taper around obstructions shall be 5:1. If a 5:1 taper cannot be achieved, then an MEF justification shall be included on the Plans for review and approval by City Staff. Sidewalk shall comply with SU-04.

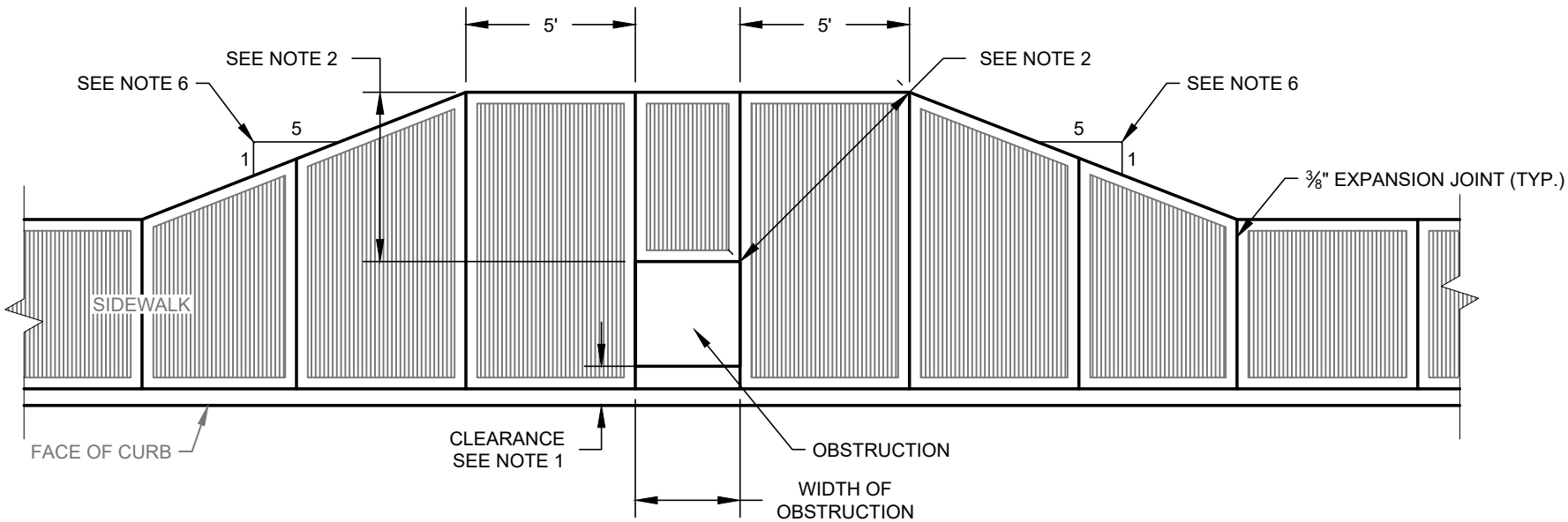

REVIEWED BY		APPROVED FOR PUBLICATION	CITY OF TACOMA
DS RVDR PUBLIC WORKS DS TACOMA POWER	DS EW ENVIRONMENTAL SERVICES DS TS TACOMA WATER	JOSHUA JAMES DIEKMANN STATE OF WASHINGTON 41361 REGISTERED PROFESSIONAL ENGINEER DocuSigned by: CITY ENGINEER 10/02/2022 DATE	SIDEWALK CLEAR WIDTHS AND OBSTRUCTION GUIDELINES STANDARD PLAN NO. SU-06

NOTES

1. Use the following as a guide of when each Entrance or Access Type should be used:
   - 1.a. Cement Concrete Driveway Entrances Type 1 (Entrances) or Accesses Type 1 (Accesses) shall be used at driveways where the planting strip width is 3' or greater. See Standard Plan SU-07A.
   - 1.b. Cement Concrete Driveway Entrances Type 2 (Entrances) or Access Type 2 (Accesses) shall be used at driveways and alleys where the planting strip is less than 3' wide. See Standard Plan SU-07B.
   - 1.c. Cement Concrete Alley Entrance Type 3 (Entrances) or Accesses Type 3 (Accesses) shall be used at alleys where the planting strip is 3' wide or greater. See Standard Plan SU-07C.
   - 1.d. New proposed planter widths shall be 5' min, with Type 1 Driveway Entrance or Type 3 Alley Entrance
2. Standard Concrete shall be a minimum compressive strength of 3,000 PSI.
3. Concrete Joints:
   - 3.a. All joints shall be cleaned & edged.
   - 3.b. All expansion or isolation joints shall be full depth.
   - 3.c. External joints to the driveway shall be 1/2" radius. Internal joints to the driveway shall be 1/4" radius.
   - 3.d. All joints shall be saw cut full depth prior to restoration and 3/8" expansion joint installed. Cutting wheel run-out beyond the limits of the opening shall be filled in accordance with WSDOT Standard Specification Section 5-03.
4. Entrances and Accesses wider or narrower than shown on this plan require approval of the Director of Public Works.
5. Entrances and Accesses shall have a brushed finish in a transverse direction to the center line of Entrance or Access.
6. Entrances or Accesses wider than 20' require a center line expansion joint.
7. When trenching through an Entrance or Access:
   - 7.a. If Entrance or Access is 20' or less in width, full replacement is required.
   - 7.b. If Entrance or Access is greater than 20' in width, a minimum 2' wide cut back over undisturbed soil is required and replacement shall extend to the nearest control joint.
8. Transition panels are required when a new driveway entrance or access matches into a sidewalk with a cross slope greater than 2%. Transition panels shall be a minimum of 5' in length.
9. For Entrances or Accesses within the North Slope Historical District area use Standard Plan HD-NS02. See Standard Plan HD-NS01 for map of Historical District area limits.
10. Permeable surfacing may be allowed for Entrances or Accesses. Refer to Standard Plans PD-01 and PD-02 as applicable. Do not compact subgrade for permeable surfacing and refer to APWA GSP 2-06.3(3) Subgrade for Permeable Pavements. A soils report is required and modeling may be necessary per SWMM BMP L633.
11. Geomembrane barrier required between standard and permeable sections. Refer to City of Tacoma Standard Plan GSI-18.
12. Refer to Tacoma Municipal Code 10.14, driveways for additional information.
13. A 2" Ø PVC Sch. 80 Pipe with capped ends shall be installed as shown, per TMC 10.14.070. Pipe shall be buried 24 inches below finished grade and have a pull string and location wire per WSDOT 9-29
14. A detectable warning surface shall be placed at any Entrance or Access if, and only if, any of the following are true/expected:
    - The Average Daily Traffic of the alley/driveway is greater than 700 or is reasonably expected to exceed 700 vehicles per typical day upon future development, such as alleys in regional growth centers and mixed-use centers where zoning supports significant growth.
    - It is located in a high pedestrian use area such as, a designated pedestrian street in a mixed-use center, or a school walking route.
    - A safety concern is documented by the City Traffic Engineer.
15. The detectable warning pattern, if needed, shall be placed the full width of the sidewalk in accordance with City of Tacoma Standard Plan SU-05A.
16. When an existing entrance or access does not meet current ADA standards as defined by the City of Tacoma's Design Manual, the entire entrance or access shall be replaced to current ADA standards.

REVIEWED BY		APPROVED FOR PUBLICATION	CITY OF TACOMA NOTES FOR CEMENT CONCRETE DRIVEWAY AND ALLEY ENTRANCE OR ACCESS
DS RVDR PUBLIC WORKS	DS EW ENVIRONMENTAL SERVICES	DocuSigned by: 10/02/2022	
DS TACOMA POWER	DS TS TACOMA WATER	CITY ENGINEER DATE	STANDARD PLAN NO. SU-07

JOSHUA JAMES DIEKMANN STATE OF WASHINGTON 41361 REGISTERED PROFESSIONAL ENGINEER

FOR DRIVEWAY ENTRANCE AND ACCESS NOTES, SEE STANDARD PLAN SU-07

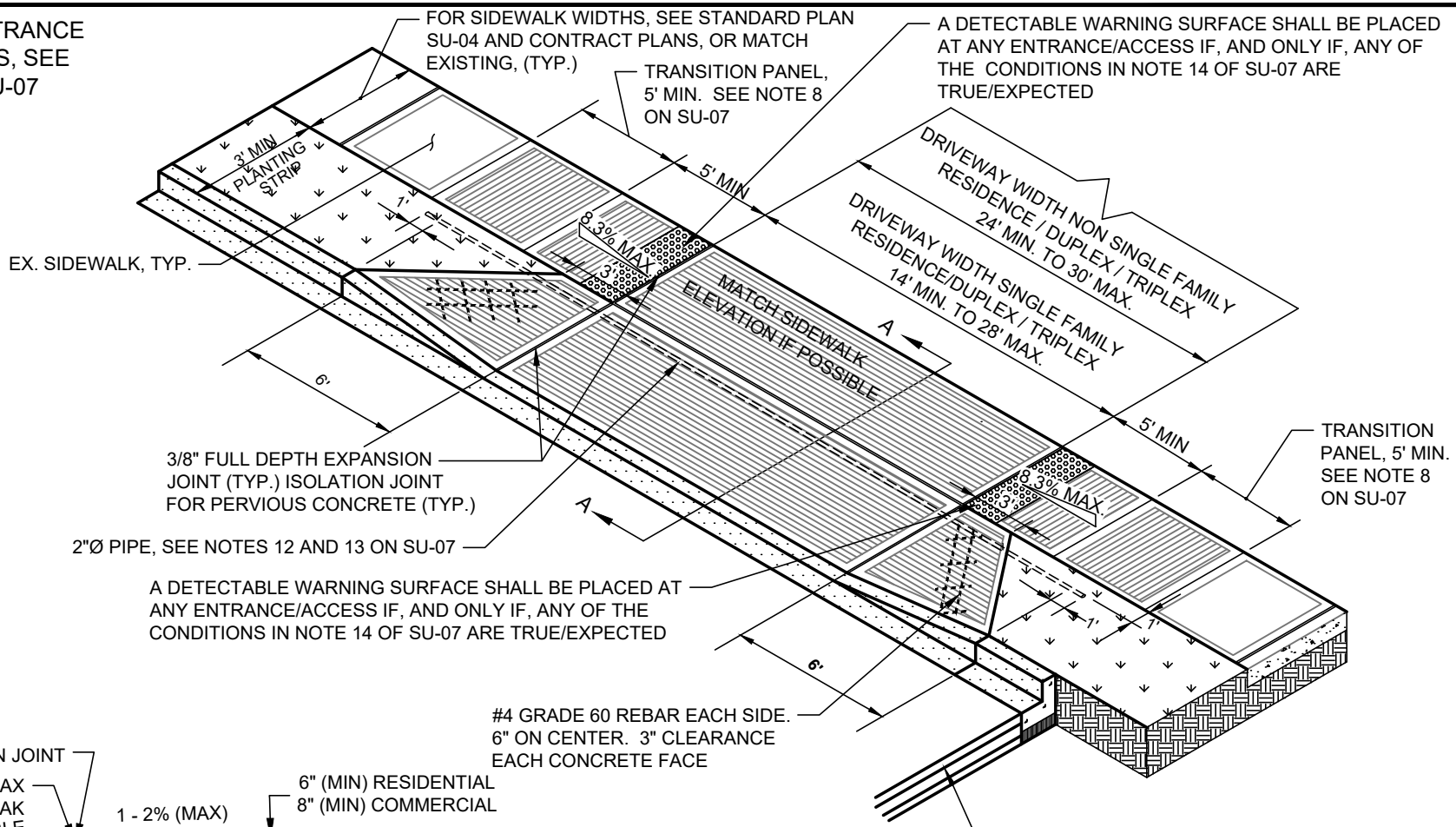

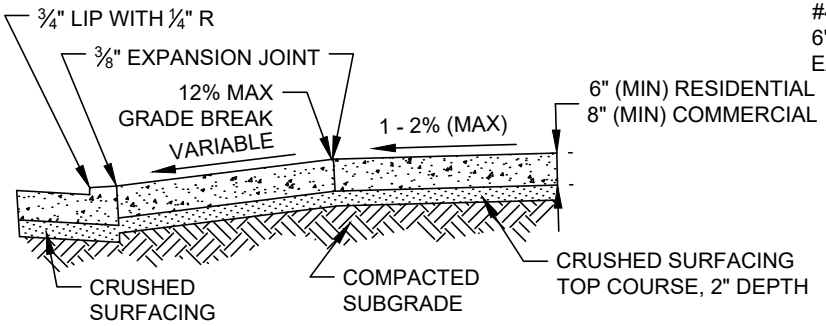

NOTE: DESIGNED SECTION REQUIRED FOR PERMEABLE SURFACING. SEE NOTES 10 AND 11 ON SU-07.

STANDARD CONCRETE SECTION DETAIL A-A

NTS

REVIEWED BY		APPROVED FOR PUBLICATION	CITY OF TACOMA CEMENT CONCRETE DRIVEWAY ENTRANCE AND ACCESS TYPE 1
DS RVDR PUBLIC WORKS	DS EW ENVIRONMENTAL SERVICES	DocuSigned by: 10/02/2022 CITY ENGINEER DATE	STANDARD PLAN NO. SU-07A
DS TACOMA POWER	DS TS TACOMA WATER		

JOSHUA JAMES DIEKMANN STATE OF WASHINGTON 41361 REGISTERED PROFESSIONAL ENGINEER

FOR DRIVEWAY ENTRANCE AND ACCESS NOTES, SEE STANDARD PLAN SU-07

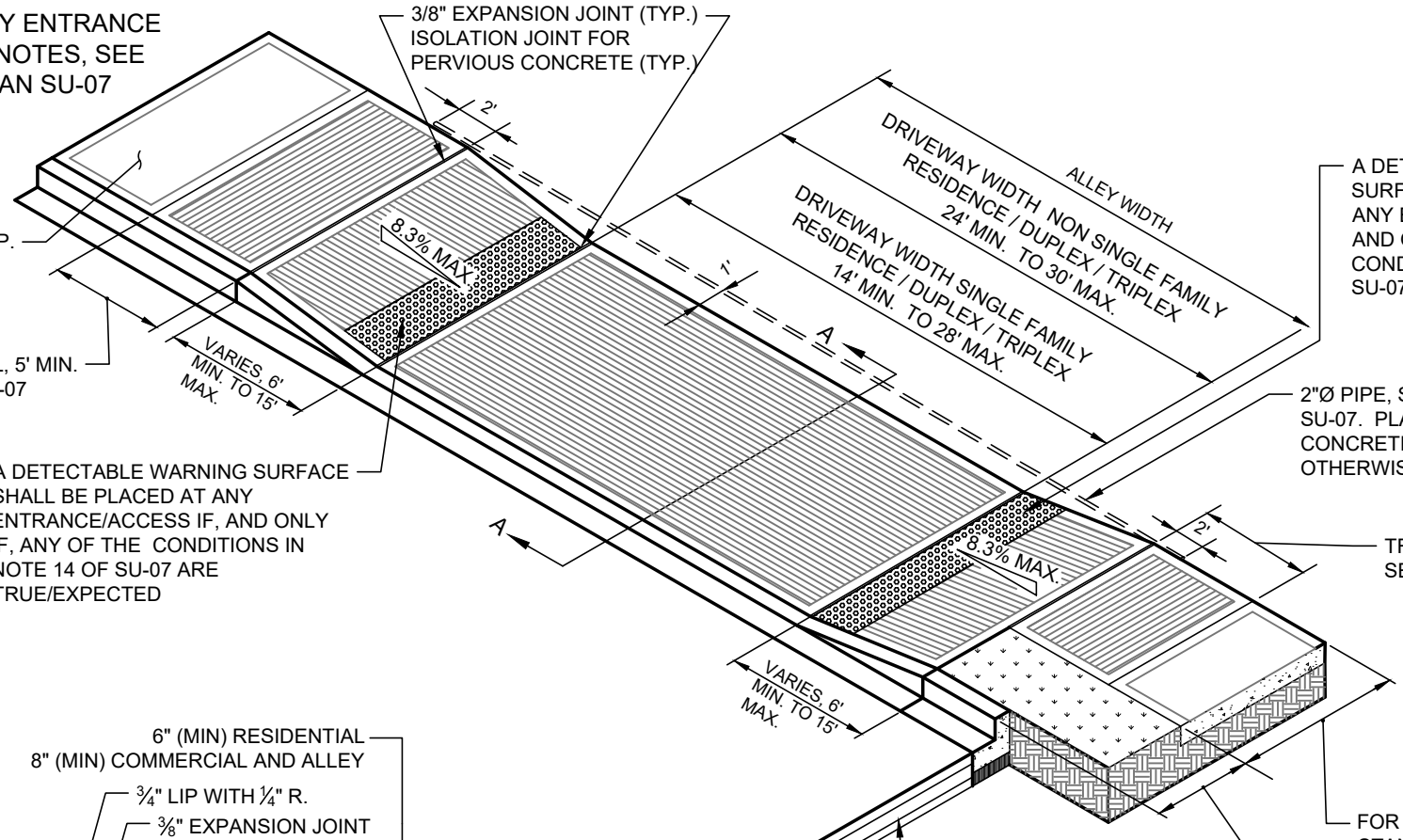

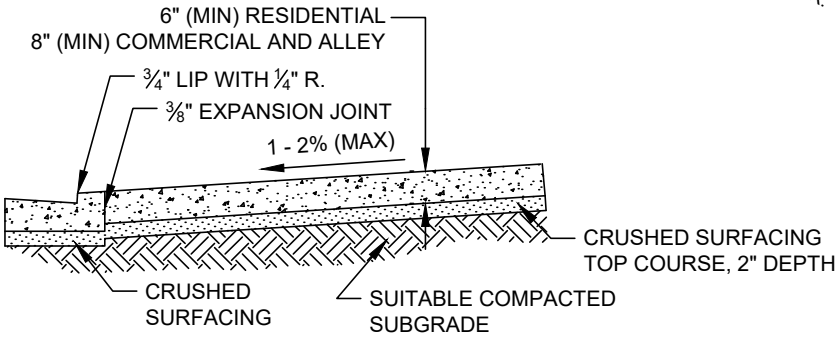

NOTE: DESIGNED SECTION REQUIRED FOR PERMEABLE SURFACING. SEE NOTES 10 AND 11 ON SU-07.

STANDARD CONCRETE SECTION DETAIL A-A

NTS

REVIEWED BY			APPROVED FOR PUBLICATION	CITY OF TACOMA CEMENT CONCRETE ALLEY ENTRANCE AND ACCESS TYPE 2
DS PUBLIC WORKS	DS ENVIRONMENTAL SERVICES	JOSHUA JAMES DIEKMANN STATE OF WASHINGTON 41361 REGISTERED PROFESSIONAL ENGINEER	DocuSigned by: 05/08/2023	
DS TACOMA POWER	DS TACOMA WATER		CITY ENGINEER 55A2DE5E2D2E4F... DATE	STANDARD PLAN NO. SU-07B

FOR ALLEY ENTRANCE AND ACCESS NOTES, SEE STANDARD PLAN SU-07

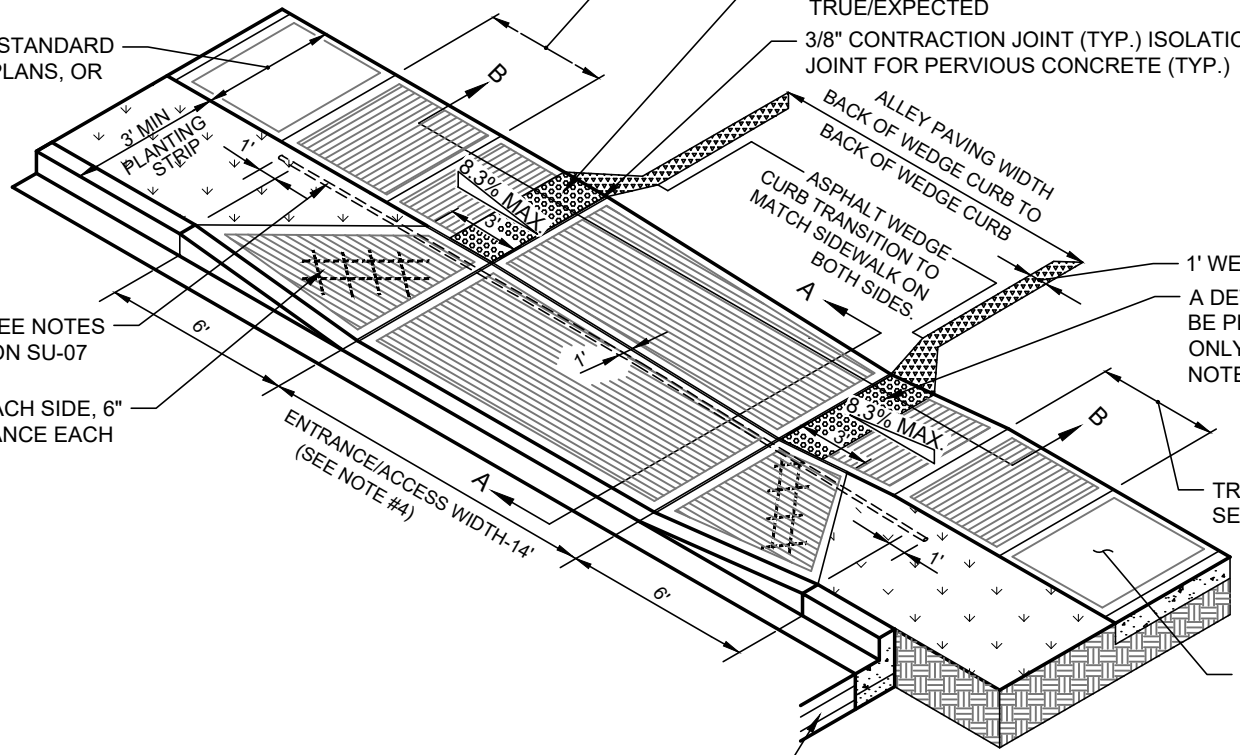

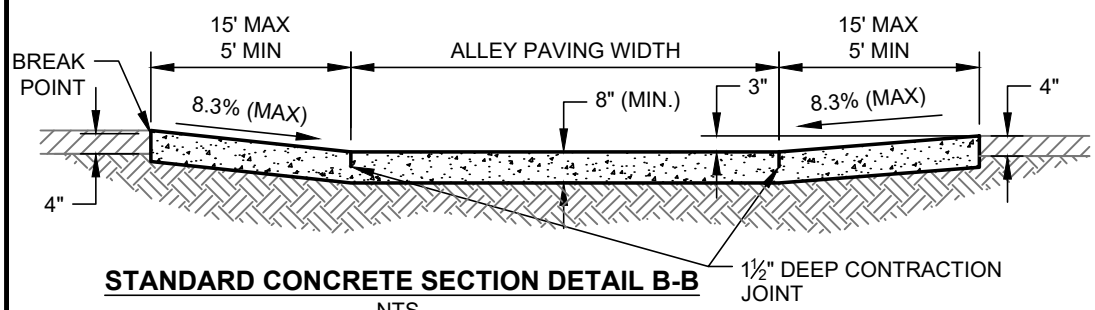

STANDARD CONCRETE SECTION DETAIL B-B

NTS

NOTE: DESIGNED SECTION REQUIRED FOR PERMEABLE SURFACING. SEE NOTES 10 AND 11 ON SU-07.

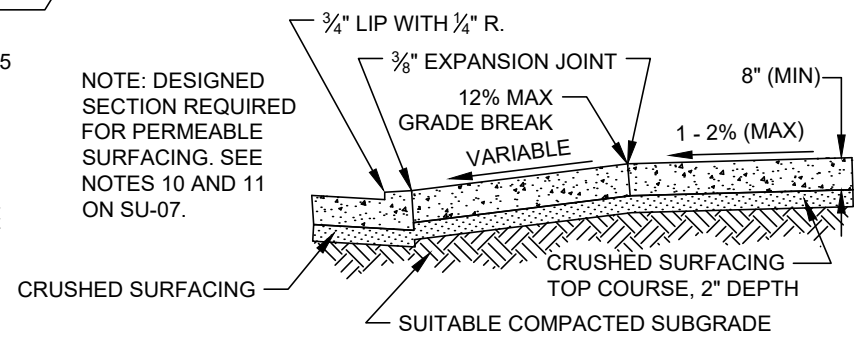

STANDARD CONCRETE SECTION DETAIL A-A

NTS

REVIEWED BY		APPROVED FOR PUBLICATION	CITY OF TACOMA CEMENT CONCRETE ALLEY ENTRANCE AND ACCESS TYPE 3
DS PUBLIC WORKS	DS ENVIRONMENTAL SERVICES	DocuSigned by: 66A2DE3ED2E46F... CITY ENGINEER	05/08/2023 DATE
DS TACOMA POWER	DS TACOMA WATER		STANDARD PLAN NO. SU-07C

JOSHUA JAMES DIEKMANN STATE OF WASHINGTON 41361 REGISTERED PROFESSIONAL ENGINEER

NOTES

1. Stairways, handrails & guards shall comply with the most current version of the International Building Code (IBC) and associated amendments, except as allowed by the Tacoma Municipal Code Title 2 Chapter 2 Section 2.01.060
2. For stairway guard and handrail details, refer to Standard Plan No. SU-11.
3. The minimum thickness of the stairway shall be 6" as measured along the shortest line perpendicular to the slope of the stairs or the total required for coverage of steel reinforcement, whichever is greater. The stairway needs to be provided with the minimum steel, based on temperature & shrinkage as set forth in the ACI code. Clearances to the concrete surfaces from the reinforcement is spelled out in ACI 318-05 Section 7.7 as follows:
   - 3.a. Concrete cast against and permanently exposed to earth: 3" clearance for reinforcing
   - 3.b. Concrete exposed to earth or weather (formed):
     - #6 through #18 Bars: 2" clearance for reinforcing
     - #5 bar, W31 or D31 wire, and smaller: 1.5" clearance for reinforcing
   - 3.c. Concrete not exposed to weather or in contact with the ground:
     - Slabs, walls, joists:
       - #14 & #18 bars: 1.5" clearance for reinforcing
       - #11 bar and smaller: 0.75" clearance for reinforcing
4. Concrete shall be a minimum compressive strength of 3,000 psi.
5. According to ACI 318-05 7.12.2.2 - Shrinkage and temperature reinforcement shall be spaced not farther apart than five times the slab thickness, nor farther apart than 18".
6. Slab reinforcing according to ACI 318-05 Section 7.12.2.1 shall provide the following ratios of reinforcement areas to gross concrete area, but not less than 0.0014:
   - 6.a. Slabs where Grade 40 or 50 deformed bars are used - 0.0020
   - 6.b. Slabs where Grade 60 deformed bars or welded wire reinforcement are used - 0.0018
   - 6.c. Slabs where reinforcement with yield stress exceeding 60,000 psi measured at a yield strain of 0.35 percent is used 0.0018 X 60,000/fy
7. Stair treads and risers shall be of uniform size and shape.
8. Where the stairway has a straight run, the depth of the landing need not exceed 48 inches. (IBC 1011.6). Landings are required at the top and bottom of stairways.
9. Where the bottom or top riser adjoins a sloping public way, walkway or driveway having an established grade and serving as a landing, the bottom or top riser is permitted to be reduced along the slope to less than 4 inches (102 mm) in height, with the variation in height of the bottom or top riser not to exceed one unit vertical in 12 units horizontal (8% slope) of stairway width.

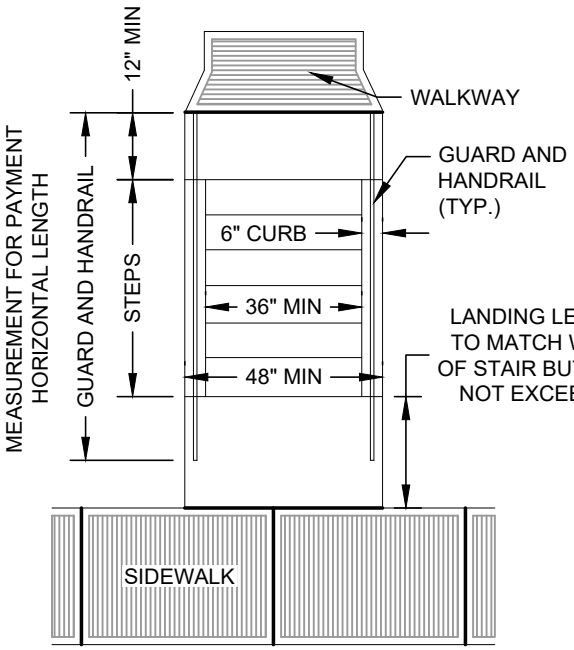

PLAN

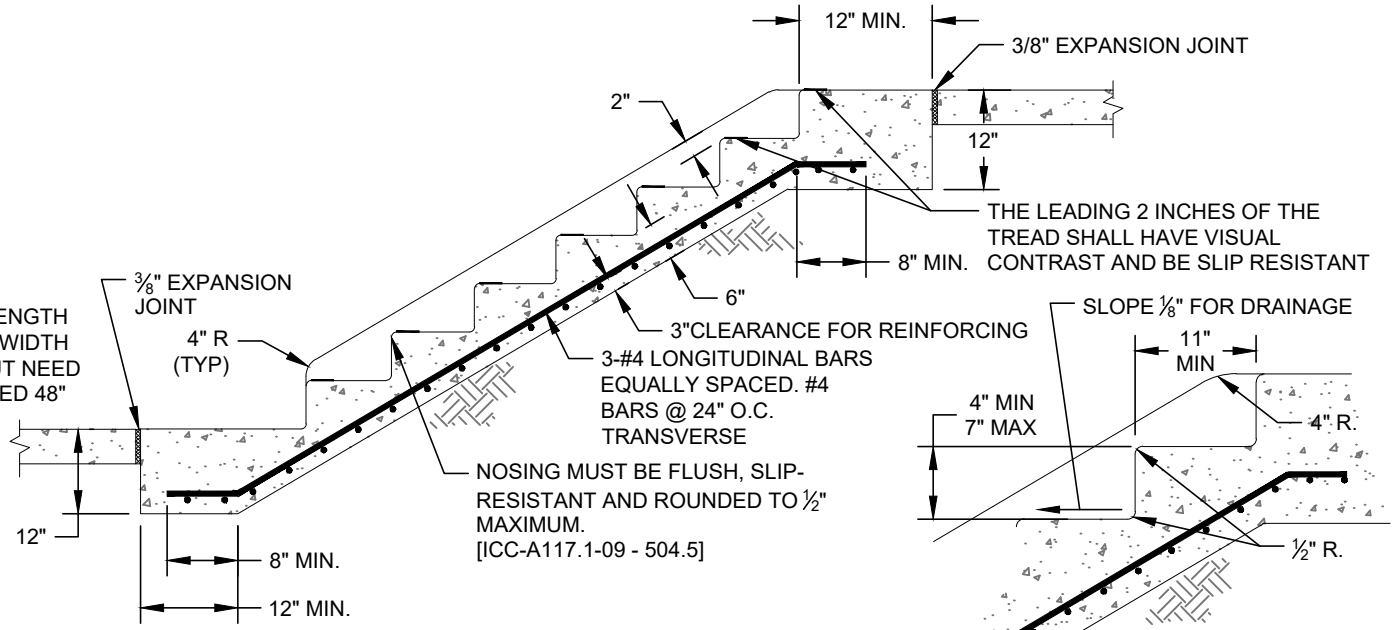

SECTION

STEP DETAIL

RVDR REVIEWED BY EW		APPROVED FOR PUBLICATION	CITY OF TACOMA
PUBLIC WORKS	ENVIRONMENTAL SERVICES	kurtis kingsolver 04/19/2021	CEMENT CONCRETE STAIRWAY
TACOMA POWER	TACOMA WATER	CITY ENGINEER DATE	STANDARD PLAN NO. SU-10

KURTIS DEAN KINGSOLVER STATE OF WASHINGTON 31229 REGISTERED PROFESSIONAL ENGINEER

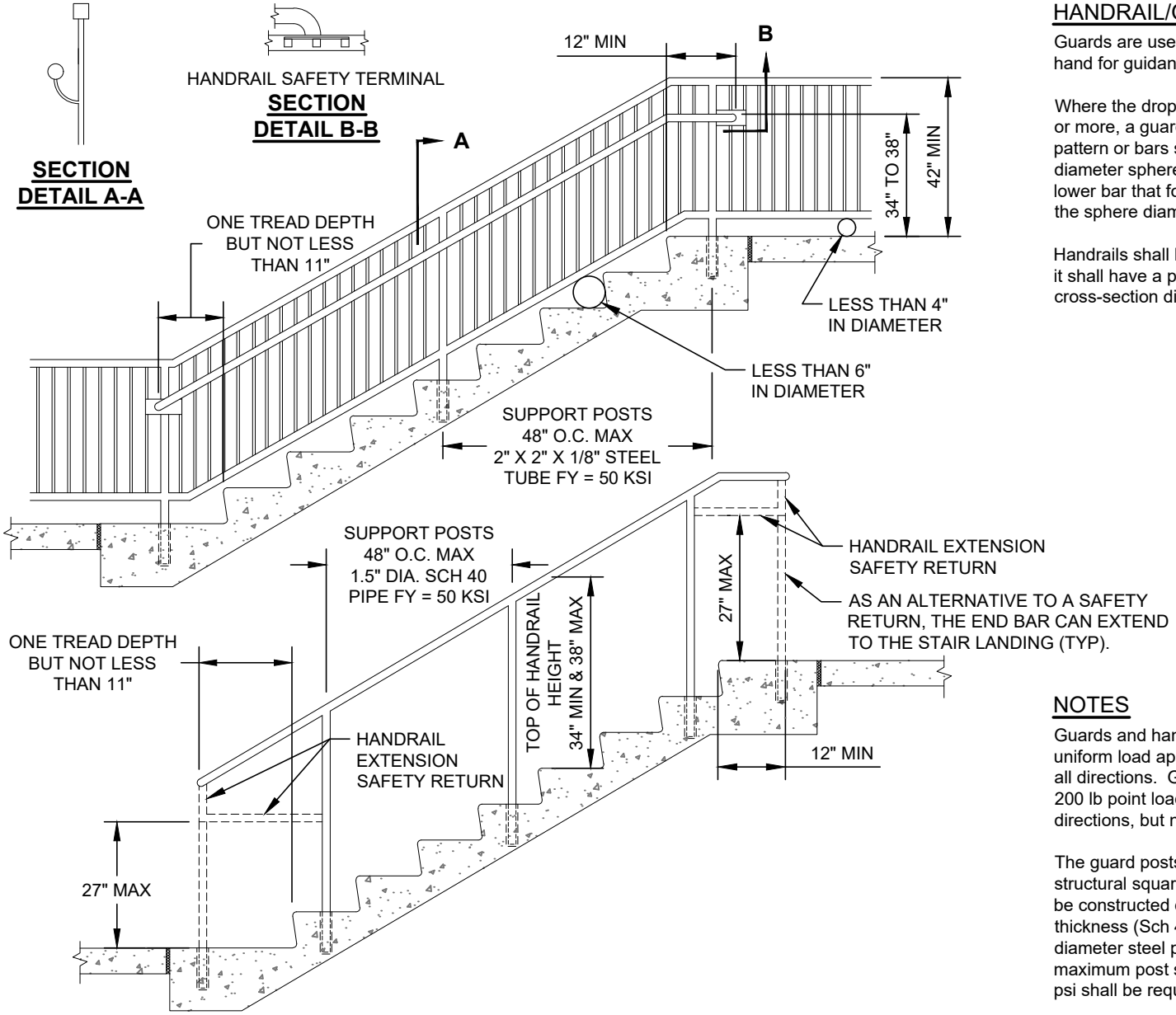

HANDRAIL/GUARD COMBINATION:

Guards are used for fall protection. Handrails are for grasping by the hand for guidance and support.

Where the drop off from the side of the stair or walking surface is 30" or more, a guard is required in addition to the handrail. Intermediate pattern or bars shall be provided within the guard to prevent a 4" diameter sphere from passing through, except where the guard has a lower bar that forms a triangle with the stair riser and the tread, here the sphere diameter can be increased to less than 6".

Handrails shall have an outside diameter of 1 1/4" to 2". If not circular, it shall have a perimeter dimension of 4" to 6 1/4" with a maximum cross-section dimension of 2 1/4".

HANDRAIL:

Stairways shall have handrails on each side (IBC 1011.11), except as allowed by the Tacoma Municipal Code Title 2 Chapter 2 Section 2.01.060

Handrails shall return to a wall, guard, or the walking surface, or shall be continuous to the handrail of an adjacent flight of stairs or ramp run.

Where handrails are not continuous between flights, the handrails for the top extension at stairs shall extend horizontally, not less than 12 inches, beyond the top riser, and the handrails for the bottom extension at stairs shall extend for a horizontal distance equal to one tread depth beyond the bottom tread nosing.

NOTES

Guards and handrails shall be designed to carry a 50 lbs/linear foot uniform load applied to the top bar of the guard or handrail in any and all directions. Guards and handrails shall also be designed to carry a 200 lb point load at any location along the top bar in any and all directions, but not simultaneously with the uniform load.

The guard posts and top rail can be constructed of 2" X 2" X 0.125" structural square tube, and a post spacing of 60" maximum. Or it can be constructed of 1.5" nominal diameter steel pipe with a 0.145" wall thickness (Sch 40) with a 42" maximum post spacing, or 1.5" nominal diameter steel pipe with a 0.20" wall thickness (Sch 80) with a 48" maximum post spacing. In all cases a steel yield strength of fy=50,000 psi shall be required.

RVDR REVIEWED BY EW		APPROVED FOR PUBLICATION	CITY OF TACOMA
PUBLIC WORKS	ENVIRONMENTAL SERVICES	kurtis kingsolver 04/19/2021	PEDESTRIAN RAILINGS GUARDS AND HANDRAILS
TACOMA POWER	TACOMA WATER	CITY ENGINEER DATE	STANDARD PLAN NO. SU-11

KURTIS DEAN KINGSOLVER STATE OF WASHINGTON 31229 REGISTERED PROFESSIONAL ENGINEER

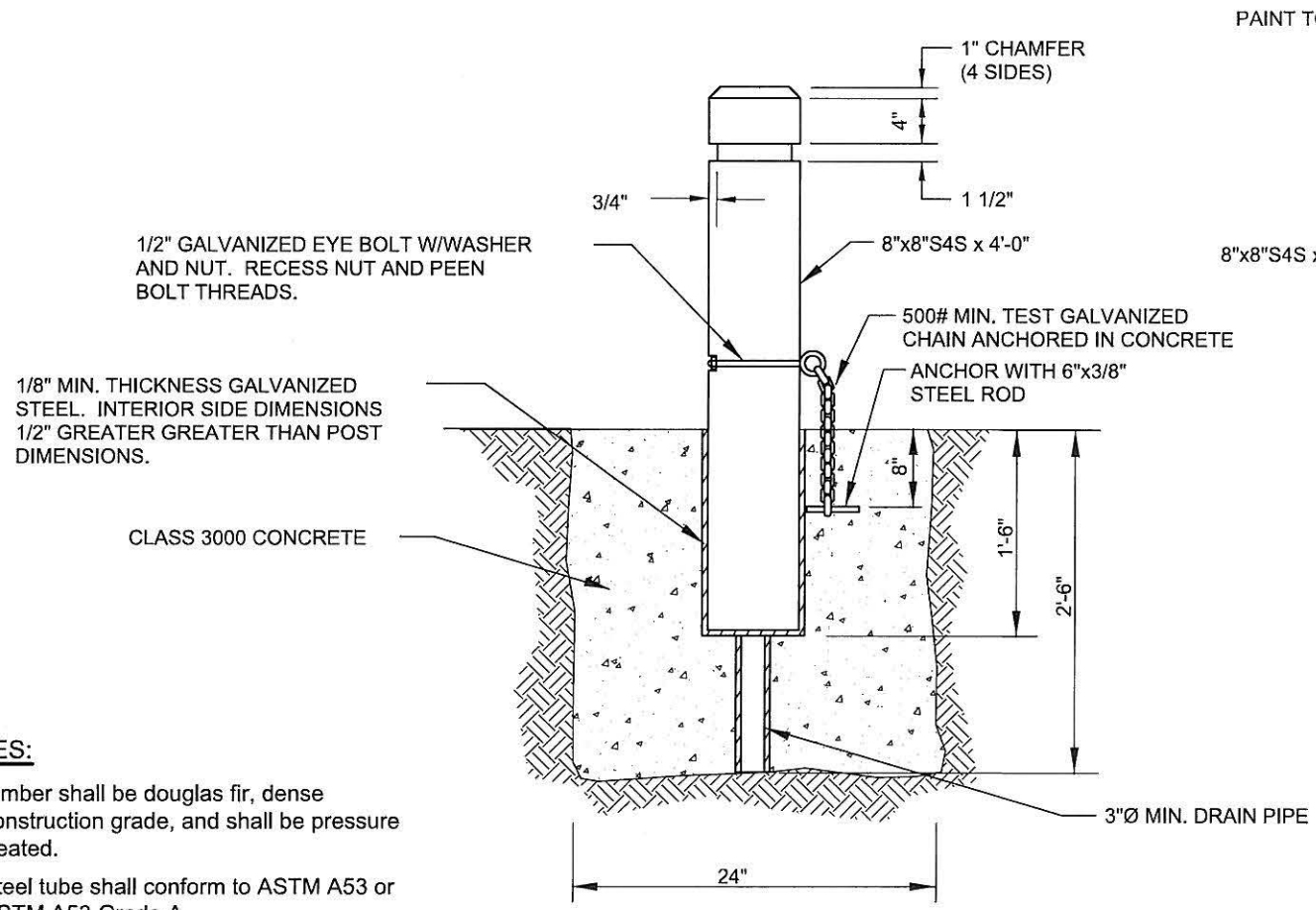

REMOVABLE BOLLARD

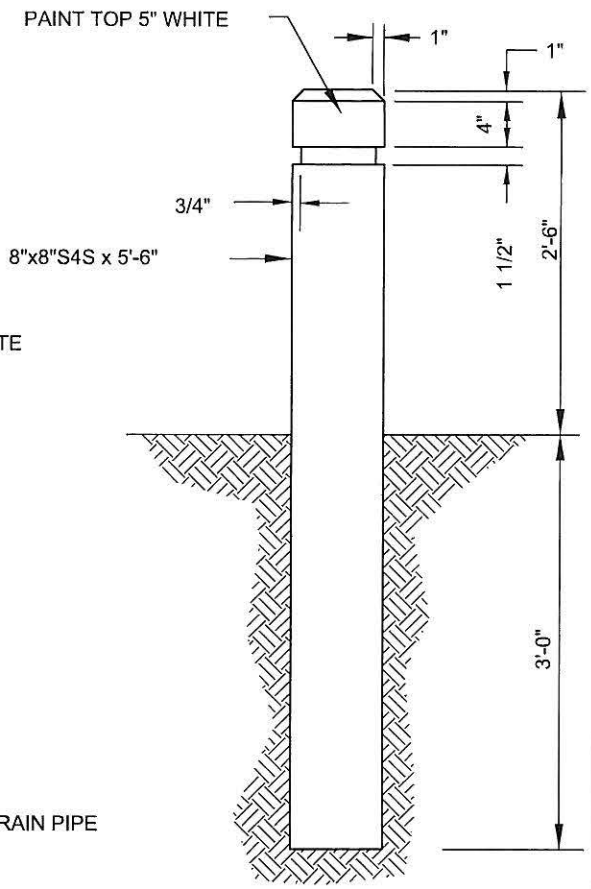

FIXED BOLLARD

NOTES:

1. Timber shall be douglas fir, dense construction grade, and shall be pressure treated.
2. Steel tube shall conform to ASTM A53 or ASTM A53 Grade A.
3. Nuts, bolts, & washers shall conform to ASTM A307.
4. All steel parts shall be galvanized.

CITY OF TACOMA DEPARTMENT OF PUBLIC WORKS	APPROVED FOR PUBLICATION CITY ENGINEER — DATE: 12 JUN 2009	BOLLARD DETAILS STANDARD PLAN NO. SU-12

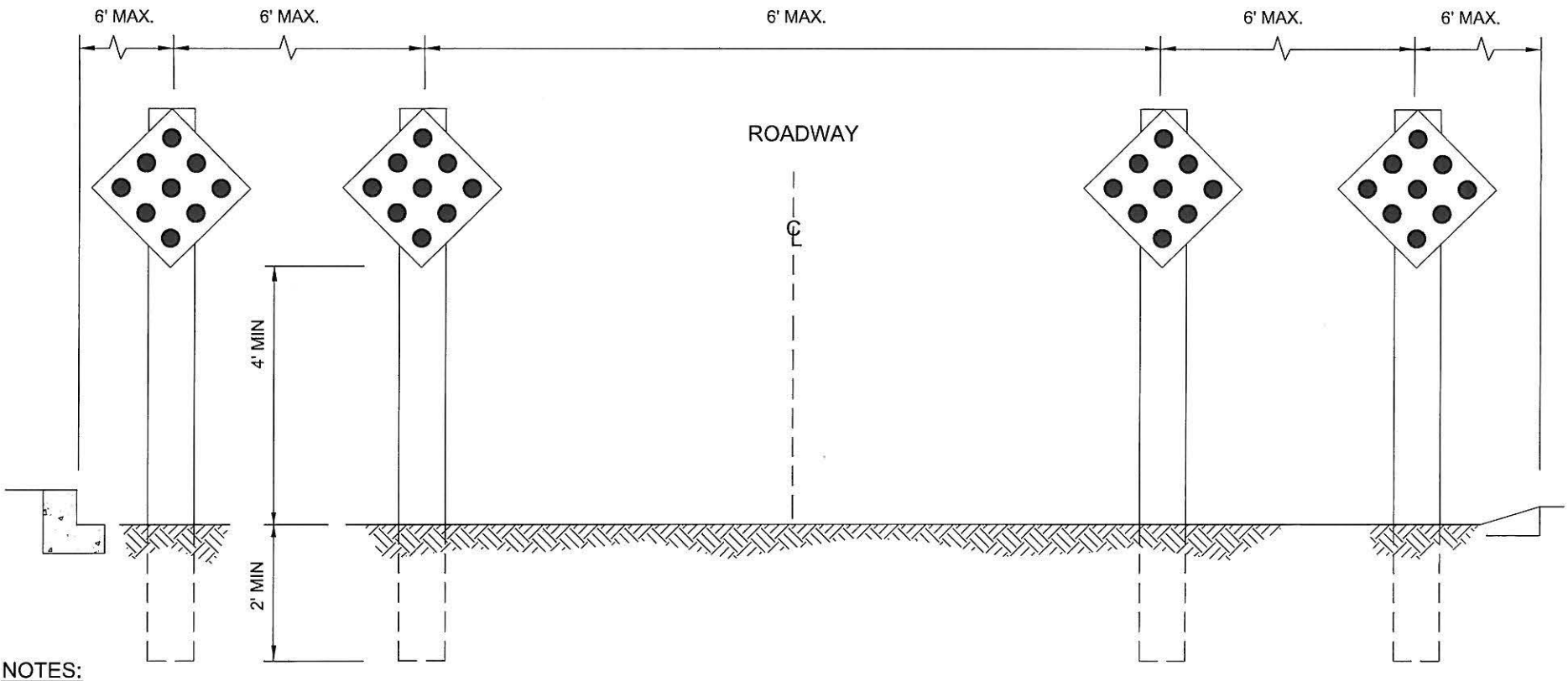

NOTES:

1. 4"x4"x8' wooden posts shall be western red cedar or pressure treated wood.
2. Hardware for mounting signs shall be hot dipped galvanized 5/16" x 2" hex head lag screws. The washers shall be USS F/W 5/16" zinc.
3. The end-of-road marker shall be one of the following:
   - a marker consisting of nine red retroreflectors with a minimum 3" diameter, mounted symmetrically on a red diamond panel 24 in. on a side (OM4-1)
   - a retroreflective red diamond panel 24 in. on a side (OM4-3).
4. Provide minimum of four posts as shown.

CITY OF TACOMA **DEPARTMENT OF PUBLIC WORKS**	**APPROVED FOR PUBLICATION** CITY ENGINEER — DATE: 12 Jun 2009	**END OF ROAD MARKER** **STANDARD PLAN NO. SU-13**

NOTES:

1. **All pavement restoration work shall also meet the requirements of the City of Tacoma's Right of Way Restoration Policy. See Standard Plan SU-14D for any streets exempt from this policy.**
2. Temporary Surface Restoration:
   Arterials, industrial areas and/or roads with bus traffic: Temporary patches shall be compacted and leveled to a minimum of 3-inches of hot-mix asphalt (HMA).

   Residentials and alleys: Temporary patches shall be compacted and leveled to a minimum of 2-inches of either HMA or cold-mix asphalt. Temporary patches between October 1st and March 31st shall be made with HMA unless otherwise approved.
3. All permanent final patches shall be rectangular in shape and constructed parallel and perpendicular to the road centerline.
4. Where existing pavement defects are in close proximity to the new cut, the inspector may require additional pavement removal to eliminate the pavement defect.
5. The final cut edge of paved surfaces shall be smooth and straight, consistent with grinding or saw cutting devices. No jagged, broken or undermined edges are allowed. Cutting wheel run-out beyond the limits of the opening shall be filled in accordance with WSDOT Standard Specification 5-05.3(8)B for cement concrete surfaces and 5-04.3(5)C for asphalt concrete surfaces.
6. Final compaction of HMA shall be 91% of maximum density.

   Isolated patches: Minimum 1 test per patch up to 150 square feet, and 1 test required every additional 300 square feet, thereafter.

   Trench patches: 1 test every 150 linear feet of trench with a minimum of 2 tests per trench.

   Testing shall be performed by a certified independent testing laboratory or certified tester, as approved by the City's Construction Division. Tests shall be completed and reports identifying the project number submitted to the City Construction Division within 48 hours of test.
7. All joints between the new and original asphalt pavement shall be sealed with hot asphalt or asphalt emulsion and covered with dry paving sand before the asphalt solidifies. Existing surfaces shall be prepared in accordance with WSDOT Standard Specification 5-04.3(5)A prior to placing any new pavement surfaces.
8. Longitudinal construction joints shall only be located at the center or edge of affected lanes.

   Streets and courts 20 feet or less in width and all alleys are considered one-lane streets.

   Non-arterial streets and courts greater than 20 feet in width with no traffic channelization are considered two-lane streets with one-lane either side of the centerline of the street.

   Non-arterial streets greater than 32 feet in width with no traffic channelization may be considered three lane streets upon prior approval from the City Engineer on a case by case basis.
9. Transverse construction joints terminate at the edge of the 2' cut back.
10. For municipal capital improvement projects, cement concrete base pavement shall be in accordance with WSDOT Standard Specification 5-05 for cement concrete pavement. For non-municipal capital improvement projects, concrete shall be a minimum compressive strength of 4,000 PSI.
11. Dowel in accordance with WSDOT Standard Plan A-60.10-00 for arterials, industrial areas, and/or roads with bus traffic. For residential streets the dowel bars may be reduced to 1-inch in diameter. In lieu of dowels, full panel replacement is acceptable.

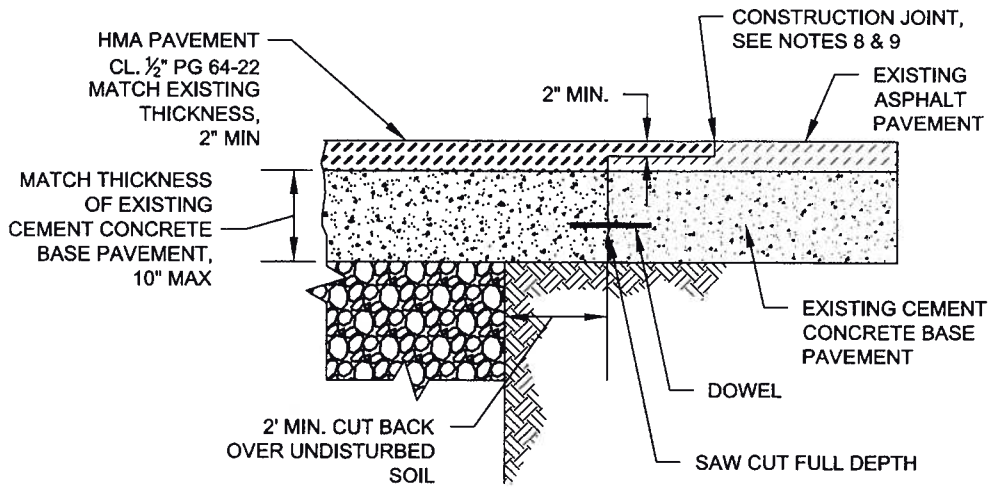

CITY OF TACOMA **DEPARTMENT OF PUBLIC WORKS**	**APPROVED FOR PUBLICATION** CITY ENGINEER — DATE 1/30/10	**TYPICAL PAVEMENT RESTORATION FOR ASPHALT OVER CEMENT CONCRETE BASE PAVEMENT** **STANDARD PLAN NO. SU-14A**

NOTES:

1. **All pavement restoration work shall also meet the requirements of the City of Tacoma's Right of Way Restoration Policy. See Standard Plan SU-14E for any streets exempt from this policy.**
2. Temporary Surface Restoration:
   Arterials, industrial areas and/or roads with bus traffic: Temporary patches shall be compacted and leveled to a minimum of 3-inches of hot-mix asphalt (HMA).

   Residentials and alleys: Temporary patches shall be compacted and leveled to a minimum of 2-inches of either hot-mix asphalt or cold-mix asphalt. Temporary patches between October 1st and March 31st shall be made with hot-mix asphalt unless otherwise approved.
3. All permanent final patches shall be rectangular in shape and constructed parallel and perpendicular to the road centerline.
4. Where existing pavement defects are in close proximity to the new cut, the inspector may require additional pavement removal to eliminate the pavement defect.
5. The final cut edge of paved surfaces shall be smooth and straight, consistent with grinding or saw cutting devices. No jagged, broken or undermined edges are allowed. Cutting wheel run-out beyond the limits of the opening shall be filled in accordance with WSDOT Standard Specification 5-05.3(8)B for cement concrete surfaces and 5-04.3(5)C for asphalt concrete surfaces.
6. Final compaction of HMA shall be 91% of maximum density.

   Isolated patches: Minimum 1 test per patch up to 150 square feet, and 1 test required every additional 300 square feet, thereafter.

   Trench patches: 1 test every 150 linear feet of trench with a minimum of 2 tests per trench.

   Testing shall be performed by a certified independent testing laboratory or certified tester, as approved by the City's Construction Division. Tests shall be completed and reports identifying the project number submitted to the City Construction Division within 48 hours of test.
7. All joints between the new and original asphalt pavement shall be sealed with hot asphalt or asphalt emulsion and covered with dry paving sand before the asphalt solidifies. Existing surfaces shall be prepared in accordance with WSDOT Standard Specfication 5-04.3(5)A prior to placing any new pavement surfaces.
8. Longitudinal construction joints shall only be located at the center or edge of affected lanes.

   Streets and courts 20 feet or less in width and all alleys are considered one-lane streets.

   Non-arterial streets and courts greater than 20 feet in width with no traffic channelization are considered two-lane streets with one-lane either side of the centerline of the street.

   Non-arterial streets greater than 32 feet in width with no traffic channelization may be considered three lane streets upon prior approval from the City Engineer on a case by case basis.
9. Transverse construction joints terminate at the edge of the 2' cut back.
10. For municipal capital improvement projects, cement concrete base pavement shall be in accordance with WSDOT Standard Specification 5-05 for cement concrete pavement. For non-municipal capital improvement projects, concrete shall be a minimum compressive strength of 4,000 PSI.

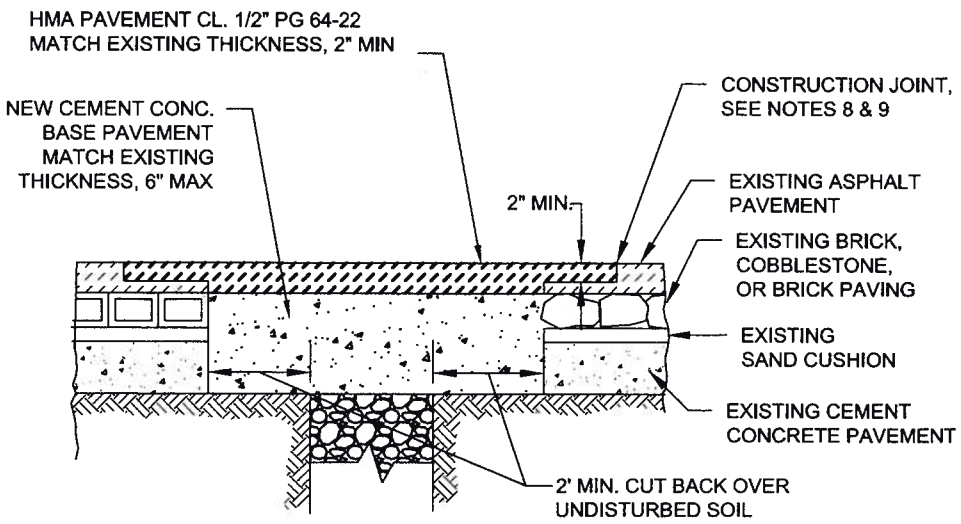

CITY OF TACOMA **DEPARTMENT OF PUBLIC WORKS**	**APPROVED FOR PUBLICATION** CITY ENGINEER — DATE 11/30/12	**TYPICAL PAVEMENT RESTORATION FOR ASPHALT OVER RIGID BASE BRICK OR STONE BLOCK PAVEMENT** **STANDARD PLAN NO. SU-14B**

NOTES:

1. **All pavement restoration work shall also meet the requirements of the City of Tacoma's Right of Way Restoration Policy.**
2. Temporary Surface Restoration:

   Arterials, industrial areas and/or roads with bus traffic: Temporary patches shall be compacted and leveled to a minimum of 3-inches of hot-mix asphalt (HMA).

   Residentials and alleys: Temporary patches shall be compacted and leveled to a minimum of 2-inches of either HMA or cold-mix asphalt. Temporary patches between October 1st and March 31st shall be made with HMA unless otherwise approved.
3. All permanent final patches shall be rectangular in shape and constructed parallel and perpendicular to the road centerline.
4. Where existing pavement defects are in close proximity to the new cut, the inspector may require additional pavement removal to eliminate the pavement defect.
5. The final cut edge of paved surfaces shall be smooth and straight, consistent with grinding or saw cutting devices. No jagged, broken or undermined edges are allowed. Cutting wheel run-out beyond the limits of the opening shall be filled in accordance with WSDOT Standard Specification 5-05.3(8)B for cement concrete surfaces and 5-04.3(5)C for asphalt concrete surfaces.
6. Permanent Panel Replacement:

   Arterials, industrial areas and/or roads with bus traffic:
   100% panel replacement is required for all affected panels. Monolithic curbs will be poured at time of panel replacement.

   Residential and Alleys: Panels cut greater than ½ the panel length, width, or total area, including the 2-foot cut back, will require 100% panel replacement. Panels cut less than ½ the panel length, width, or total area, including the 2-foot cut back will require 50% panel replacement. Three-piece panels are not acceptable and will require 100% panel replacement.
7. For municipal capital improvement projects, cement concrete base pavement shall be in accordance with WSDOT Standard Specification 5-05 for cement concrete pavement. For non-municipal capital improvement projects, concrete shall be a minimum compressive strength of 4,000 PSI.
8. Dowel in accordance with WSDOT Standard Plan A-60.10-00 for arterials, industrial areas, and/or roads with bus traffic. In residential streets the dowel bars may be reduced to 1-inch in diameter. In lieu of dowels, full panel replacement is acceptable.

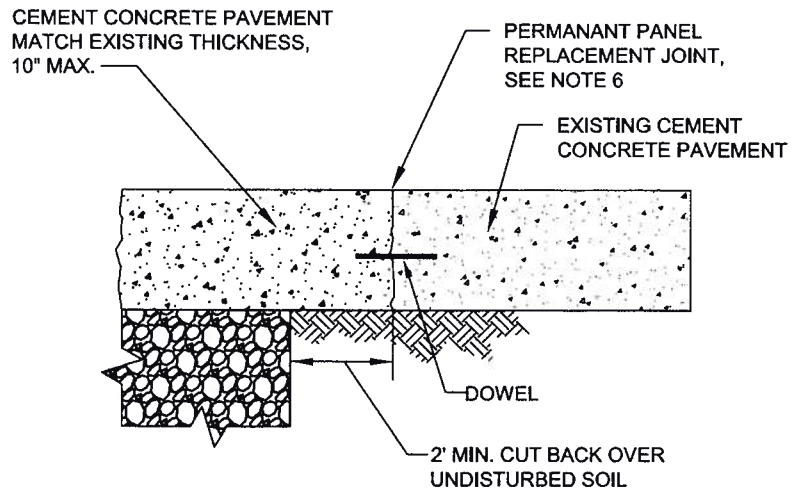

CITY OF TACOMA **DEPARTMENT OF PUBLIC WORKS**	**APPROVED FOR PUBLICATION** CITY ENGINEER — DATE 11/20/10	**TYPICAL PAVEMENT RESTORATION FOR CEMENT CONCRETE PAVEMENT** **STANDARD PLAN NO. SU-14C**

NOTES:

1. **This Standard Plan shall only apply to streets that are exempt from the City of Tacoma's Restoration Policy. See Standard Plan SU-14A for any streets not exempt from this policy.**
2. Temporary Surface Restoration:
   Arterials, industrial areas and/or roads with bus traffic: Temporary patches shall be compacted and leveled to a minimum of 3-inches of hot-mix asphalt (HMA).

   Residentials and alleys: Temporary patches shall be compacted and leveled to a minimum of 2-inches of either HMA or cold-mix asphalt. Temporary patches between October 1st and March 31st shall be made with HMA unless otherwise approved.
3. All permanent final patches shall be rectangular in shape and constructed parallel and perpendicular to the road centerline.
4. Where existing pavement defects are in close proximity to the new cut, the inspector may require additional pavement removal to eliminate the pavement defect.
5. The final cut edge of paved surfaces shall be smooth and straight, consistent with grinding or saw cutting devices. No jagged, broken or undermined edges are allowed. Cutting wheel run-out beyond the limits of the opening shall be filled in accordance with WSDOT Standard Specification 5-05.3(8)B for cement concrete surfaces and 5-04.3(5)C for asphalt concrete surfaces.
6. Final compaction of HMA shall be 91% of maximum density.

   Testing shall be performed by a certified independent testing laboratory or certified tester, as approved by the City's Construction Division. Tests shall be completed and reports identifying the project number submitted to the City Construction Division within 48 hours of test.
7. If remaining pavement adjacent to the patch is less than 3' wide, remove and replace to match existing pavement.
8. All joints between the new and original asphalt pavement shall be sealed with hot asphalt or asphalt emulsion and covered with dry paving sand before the asphalt solidifies. Existing surfaces shall be prepared in accordance with WSDOT Standard Specification 5-04.3(5)A prior to placing any new pavement surfaces.
9. For municipal capital improvement projects, cement concrete base pavement shall be in accordance with WSDOT Standard Specification 5-05 for cement concrete pavement. For non-municipal capital improvement projects, concrete shall be a minimum compressive strength of 4,000 PSI.
10. Dowel in accordance with WSDOT Standard Plan A-60.10-00 for arterials, industrial areas, and/or roads with bus traffic. For residential streets the dowel bars may be reduced to 1-inch in diameter. In lieu of dowels, full panel replacement is acceptable.

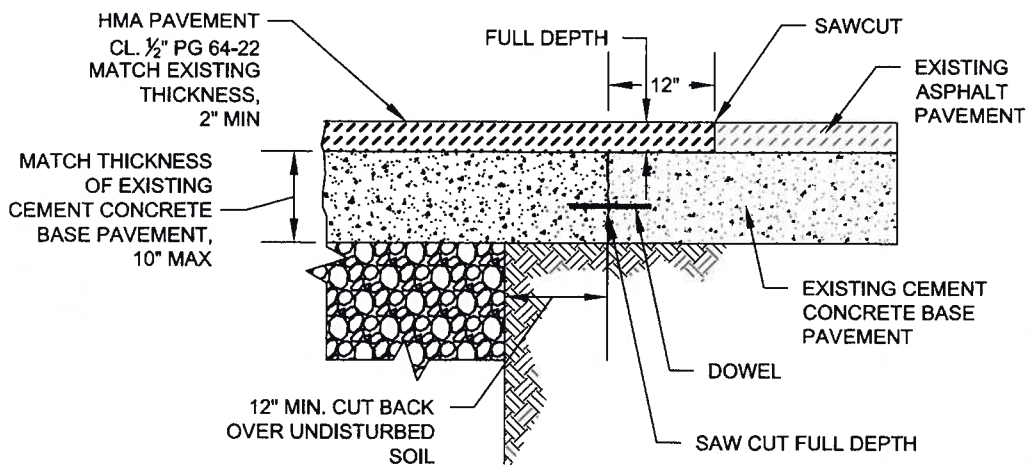

CITY OF TACOMA **DEPARTMENT OF PUBLIC WORKS**	**APPROVED FOR PUBLICATION** CITY ENGINEER — DATE 1/20/10	**TYPICAL PAVEMENT RESTORATION FOR ASPHALT OVER CEMENT CONCRETE BASE PAVEMENT** **STANDARD PLAN NO. SU-14D**

NOTES:

1. **This Standard Plan shall only apply to streets that are exempt from the City of Tacoma's Restoration Policy. See Standard Plan SU-14B for any streets not exempt from this policy.**
2. Temporary Surface Restoration:
   Arterials, industrial areas and/or roads with bus traffic: Temporary patches shall be compacted and leveled to a minimum of 3-inches of hot-mix asphalt (HMA).

   Residentials and alleys: Temporary patches shall be compacted and leveled to a minimum of 2-inches of either hot-mix asphalt or cold-mix asphalt.
   Temporary patches between October 1st and March 31st shall be made with hot-mix asphalt unless otherwise approved.
3. All permanent final patches shall be rectangular in shape and constructed parallel and perpendicular to the road centerline.
4. Where existing pavement defects are in close proximity to the new cut, the inspector may require additional pavement removal to eliminate the pavement defect.
5. The final cut edge of paved surfaces shall be smooth and straight, consistent with grinding or saw cutting devices. No jagged, broken or undermined edges are allowed. Cutting wheel run-out beyond the limits of the opening shall be filled in accordance with WSDOT Standard Specification 5-05.3(8)B for cement concrete surfaces and 5-04.3(5)C for asphalt concrete surfaces.
6. Final compaction of HMA shall be 91% of maximum density.

   Testing shall be performed by a certified independent testing laboratory or certified tester, as approved by the City's Construction Division. Tests shall be completed and reports identifying the project number submitted to the City Construction Division within 48 hours of test.
7. All joints between the new and original asphalt pavement shall be sealed with hot asphalt or asphalt emulsion and covered with dry paving sand before the asphalt solidifies. Existing surfaces shall be prepared in accordance with WSDOT Standard Specfication 5-04.3(5)A prior to placing any new pavement surfaces.
8. For municipal capital improvement projects, cement concrete base pavement shall be in accordance with WSDOT Standard Specification 5-05 for cement concrete pavement. For non-municipal capital improvement projects, concrete shall be a minimum compressive strength of 4,000 PSI.

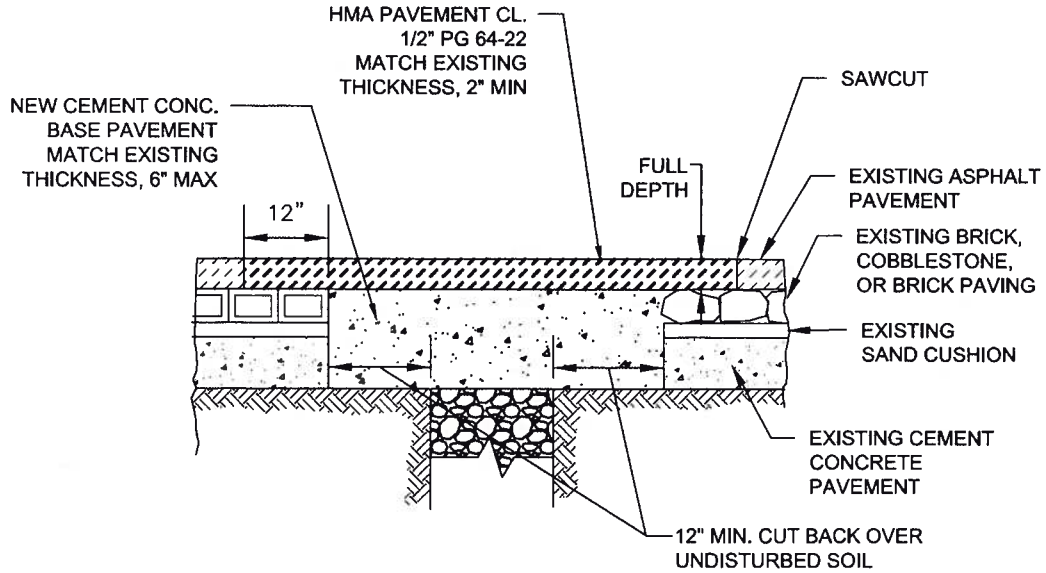

CITY OF TACOMA **DEPARTMENT OF PUBLIC WORKS**	**APPROVED FOR PUBLICATION** CITY ENGINEER — DATE 11/20/10	**TYPICAL PAVEMENT RESTORATION FOR ASPHALT OVER RIGID BASE BRICK OR STONE BLOCK PAVEMENT** **STANDARD PLAN NO. SU-14E**

NOTES:

1. **To be used only where abutting surfaces are pervious concrete or as directed in writing by City of Tacoma. Permeable roads may be required to be patched in an alternate material as directed in writing by City of Tacoma.**
2. **All pavement restoration work shall also meet the requirements of the City of Tacoma's Right of Way Restoration Policy.**
3. Temporary Surface Restoration:

   Arterials, industrial areas and/or roads with bus traffic: Temporary patches shall be compacted and leveled to a minimum of 3-inches of hot-mix asphalt (HMA).

   Residentials and alleys: Temporary patches shall be compacted and leveled to a minimum of 2-inches of either HMA or cold-mix asphalt. Temporary patches between October 1st and March 31st shall be made with HMA unless otherwise approved.
4. All permanent final patches shall be rectangular in shape and constructed parallel and perpendicular to the road centerline.
5. Where existing pavement defects are in close proximity to the new cut, the inspector may require additional pavement removal to eliminate the pavement defect.
6. The final cut edge of paved surfaces shall be smooth and straight, consistent with grinding or saw cutting devices. No jagged, broken or undermined edges are allowed. Cutting wheel run-out beyond the limits of the opening shall be filled in accordance with WSDOT Standard Specification 5-05.3(8)B for cement concrete surfaces. Joint sealant shall not migrate beyond run-out areas.
7. All pervious surfaces shall be vacuumed immediately after completion of sawcutting to prevent clogging.
8. Permanent Panel Replacement:

   Arterials, industrial areas and/or roads with bus traffic:
   100% panel replacement is required for all affected panels. Monolithic curbs will be poured at time of panel replacement.

   Residential and Alleys: Panels cut greater than ½ the panel length, width, or total area, including the 2-foot cut back, will require 100% panel replacement. Panels cut less than ½ the panel length, width, or total area, including the 2-foot cut back will require 50% panel replacement. Three-piece panels are not acceptable and will require 100% panel replacement.
9. Pervious concrete pavement mix shall be approved in writing by the City of Tacoma.
10. Where geotextile fabric or geomembrane liner exist under the permeable ballast, replace with same material. Additional width of excavation may be necessary to overlay fabric or liner. Where a liner is used to create a watertight barrier, repair per manufacturer's specifications to maintain a watertight barrier.

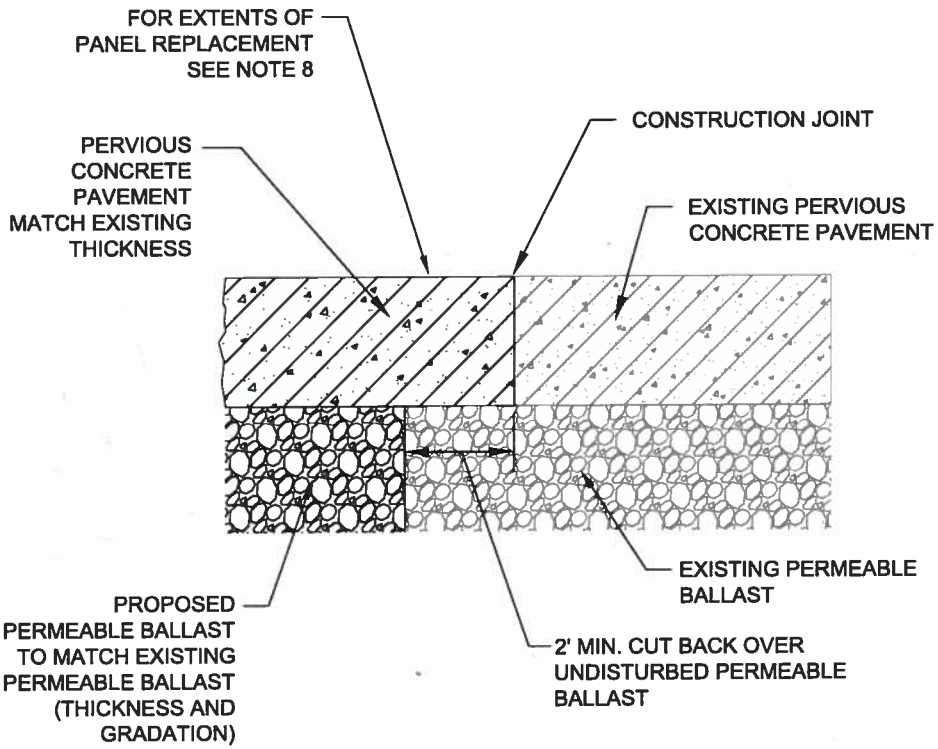

REVIEWED BY			APPROVED FOR PUBLICATION	CITY OF TACOMA TYPICAL PAVEMENT RESTORATION FOR PERVIOUS CONCRETE PAVEMENT
DCS PUBLIC WORKS	GMS ENVIRONMENTAL SERVICES	KURTIS DEAN KINGSOLVER STATE OF WASHINGTON 31229 REGISTERED PROFESSIONAL ENGINEER	4/9/10 CITY ENGINEER DATE	STANDARD PLAN NO. SU-14F
NA TACOMA POWER	NA TACOMA WATER			

NOTES

1. **All pavement restoration work shall also meet the requirements of the City of Tacoma's Right of Way Restoration Policy. See Standard Plan SU-15B for any streets exempt from this policy.**
2. Temporary Surface Restoration:
   Arterials, industrial areas and/or roads with bus traffic: Temporary patches shall be compacted and leveled to a minimum of 3-inches of hot-mix asphalt (HMA).

   Residentials and alleys: Temporary patches shall be compacted and leveled to a minimum of 2-inches of either HMA or cold-mix asphalt. Temporary patches between October 1st and March 31st shall be made with HMA unless otherwise approved.
3. All permanent final patches shall be rectangular in shape and constructed parallel and perpendicular to the road centerline.
4. Where existing pavement defects are in close proximity to the new cut, the inspector may require additional pavement removal to eliminate the pavement defect.
5. The final cut edge of paved surfaces shall be smooth and straight, consistent with grinding or saw cutting devices. No jagged, broken or undermined edges are allowed. Cutting wheel run-out beyond the limits of the opening shall be filled in accordance with WSDOT Standard Specification 5-05.3(8)B for cement concrete surfaces and 5-04.3(5)C for asphalt concrete surfaces.
6. Final compaction of HMA shall be 91% of maximum density.

   Isolated patches: Minimum 1 test per patch up to 150 square feet, and 1 test required every additional 300 square feet, thereafter.

   Trench patches: 1 test every 150 linear feet of trench with a minimum of 2 tests per trench.

   Testing shall be performed by a certified independent testing laboratory or certified tester, as approved by the City's Construction Division. Tests shall be completed and reports identifying the project number submitted to the City Construction Division within 48 hours of test.
7. All joints between the new and original asphalt pavement shall be sealed with hot asphalt or asphalt emulsion and covered with dry paving sand before the asphalt solidifies. Existing surfaces shall be prepared in accordance with WSDOT Standard Specification 5-04.3(5)A prior to placing any new pavement surfaces.
8. Longitudinal construction joints shall only be located at the center or edge of affected lanes.

   Streets and courts 20 feet or less in width and all alleys are considered one-lane streets. Non-arterial streets and courts greater than 20 feet in width with no traffic channelization are considered two-lane streets with one-lane either side of the centerline of the street.

   Non-arterial streets greater than 32 feet in width with no traffic channelization may be considered three lane streets upon prior approval from the City Engineer.
9. Transverse construction joints terminate at the edge of the 2' cut back.
10. HMA pavement shall not be placed over CDF until approved by the City.

TABLE 1

PAVEMENT REPLACEMENT DEPTH IN CUT BACK ZONE

	MIN.	MAX.
ARTERIALS, INDUSTRIAL AREAS & ROADS WITH BUS TRAFFIC	MATCH EXISTING +1", OR 4", WHICHEVER IS GREATER	6"
RESIDENTIALS AND ALLEYS	MATCH EXISTING +1", OR 3", WHICHEVER IS GREATER	4"

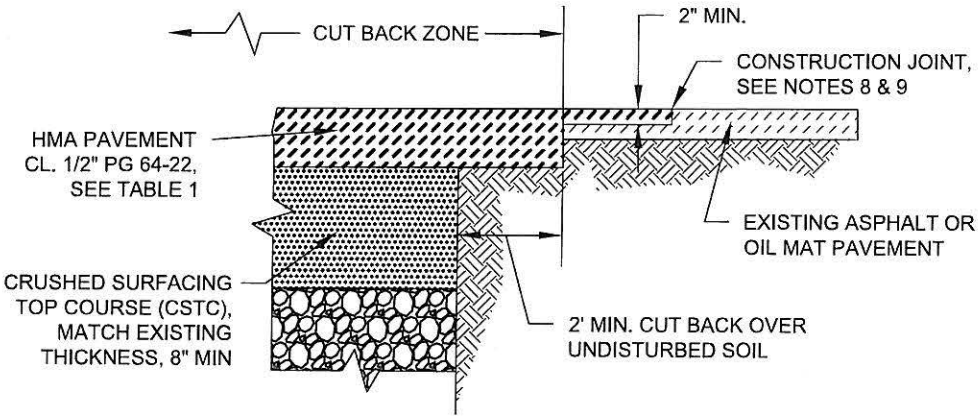

CITY OF TACOMA DEPARTMENT OF PUBLIC WORKS	APPROVED FOR PUBLICATION CITY ENGINEER — DATE: 12 Jun 2009	TYPICAL PAVEMENT RESTORATION FOR ASPHALT CONCRETE/OIL MAT PAVEMENT STANDARD PLAN NO. SU-15A

NOTES

1. **This Standard Plan shall only apply to streets that are exempt from the City of Tacoma's Restoration Policy. See Standard Plan SU-15A for any streets not exempt from this policy.**
2. Temporary Surface Restoration:
   Arterials, industrial areas and/or roads with bus traffic: Temporary patches shall be compacted and leveled to a minimum of 3-inches of hot-mix asphalt (HMA).

   Residentials and alleys: Temporary patches shall be compacted and leveled to a minimum of 2-inches of either HMA or cold-mix asphalt. Temporary patches between October 1st and March 31st shall be made with HMA unless otherwise approved.
3. All permanent final patches shall be rectangular in shape and constructed parallel and perpendicular to the road centerline.
4. Where existing pavement defects are in close proximity to the new cut, the inspector may require additional pavement removal to eliminate the pavement defect.
5. The final cut edge of paved surfaces shall be smooth and straight, consistent with grinding or saw cutting devices. No jagged, broken or undermined edges are allowed. Cutting wheel run-out beyond the limits of the opening shall be filled in accordance with WSDOT Standard Specification 5-05.3(8)B for cement concrete surfaces and 5-04.3(5)C for asphalt concrete surfaces.
6. Final compaction of HMA shall be 91% of maximum density.

   Testing shall be performed by a certified independent testing laboratory or certified tester, as approved by the City's Construction Division. Tests shall be completed and reports identifying the project number submitted to the City Construction Division within 48 hours of test.
7. All joints between the new and original asphalt pavement shall be sealed with hot asphalt or asphalt emulsion and covered with dry paving sand before the asphalt solidifies. Existing surfaces shall be prepared in accordance with WSDOT Standard Specification 5-04.3(5)A prior to placing any new pavement surfaces.
8. HMA pavement shall not be placed over CDF until approved by the City.
9. If remaining pavement adjacent to the patch is less than 3' wide, remove and replace with asphalt concrete pavement to match existing (minimum 2").

TABLE 1

PAVEMENT REPLACEMENT DEPTH IN CUT BACK ZONE

	MIN.	MAX.
ARTERIALS, INDUSTRIAL AREAS & ROADS WITH BUS TRAFFIC	MATCH EXISTING +1", OR 4", WHICHEVER IS GREATER	6"
RESIDENTIALS AND ALLEYS	MATCH EXISTING +1", OR 3", WHICHEVER IS GREATER	4"

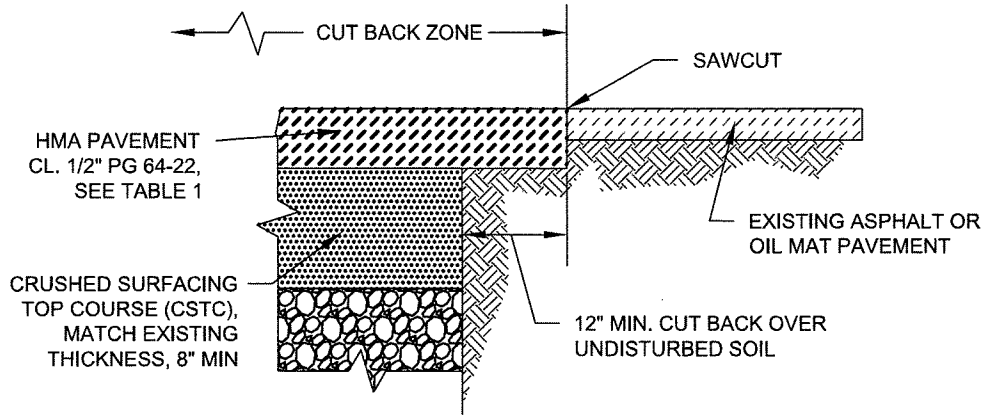

CITY OF TACOMA DEPARTMENT OF PUBLIC WORKS	APPROVED FOR PUBLICATION CITY ENGINEER — DATE 7/17/09	TYPICAL PAVEMENT RESTORATION FOR ASPHALT CONCRETE/OIL MAT PAVEMENT STANDARD PLAN NO. SU-15B

NOTES:

1. **To be used only where abutting surfaces are porous asphalt or as directed in writing by City of Tacoma. Permeable roads may be required to be patched in an alternate material as directed in writing by City of Tacoma.**
2. **All pavement restoration work shall also meet the requirements of the City of Tacoma's Right of Way Restoration Policy. For any streets exempt from this policy, compliance with notes 8 and 9 is not required, compliance with note 12 is required.**
3. Temporary Surface Restoration:
   Arterials, industrial areas and/or roads with bus traffic: Temporary patches shall be compacted and leveled to a minimum of 3-inches of hot-mix asphalt (HMA).
   Residentials and alleys: Temporary patches shall be compacted and leveled to a minimum of 2-inches of either HMA or cold-mix asphalt. Temporary patches between October 1st and March 31st shall be made with HMA unless otherwise approved.
4. All permanent final patches shall be rectangular in shape and constructed parallel and perpendicular to the road centerline.
5. Where existing pavement defects are in close proximity to the new cut, the City Inspector may require additional pavement removal to eliminate the pavement defect.
6. The final cut edge of paved surfaces shall be smooth and straight, consistent with grinding or saw cutting devices. No jagged, broken or undermined edges are allowed. Cutting wheel run-out beyond the limits of the opening shall be filled in accordance with WSDOT Standard Specification 5-04.3(5)C for asphalt concrete surfaces. Joint sealant shall not migrate beyond run-out areas.
7. Final compaction of porous HMA shall meet APWA GSP 5-04.3(10)A General.

   Isolated patches: Minimum 1 test per patch up to 150 square feet, and 1 test required every additional 300 square feet, thereafter.

   Trench patches: 1 test every 150 linear feet of trench with a minimum of 2 tests per trench.

   Testing shall be performed by a certified independent testing laboratory or certified tester, as approved by the City's Inspector. Tests shall be completed and reports identifying the project number submitted to the City's Inspector within 48 hours of test.
8. Longitudinal construction joints shall only be located at the center or edge of affected lanes.

   Roadways 20 feet or less in width and all alleys are considered one-lane streets. Non-arterial roadways greater than 20 feet in width with no traffic channelization are considered two-lane streets with one-lane either side of the centerline of the street.

   Non-arterial streets greater than 32 feet in width with no traffic channelization may be considered three lane streets upon prior approval from the City Engineer.
9. Transverse construction joints terminate at the edge of the 2' cut back.
10. Porous HMA and Asphalt Treated Permeable Base (ATPB) pavement shall not be placed over CDF until approved by the City.
11. Where geotextile fabric or geomembrane liner exist under the permeable ballast, replace with same material. Additional width of excavation may be necessary to overlay fabric or liner. Where a liner is used to create a watertigtht barrier, repair per manufacturer's specifications and to maintain a watertight barrier.
12. If remaining pavement adjacent to the patch is less than 3' wide, remove and replace asphalt concrete pavement to match existing (minimum 2"). This note only applies to roads not subject to the City of Tacoma's Restoration Policy.
13. All pervious surfaces shall be vacuumed immediately after completion of sawcutting to prevent clogging.

TABLE 1

PAVEMENT REPLACEMENT DEPTH IN CUT BACK ZONE	
ARTERIALS & INDUSTRIAL AREAS	PER WRITTEN AUTHORIZATION ONLY
RESIDENTIALS AND ALLEYS	MATCH EXISTING, OR 2" POROUS HMA OVER 3" ATPB, WHICHEVER IS GREATER

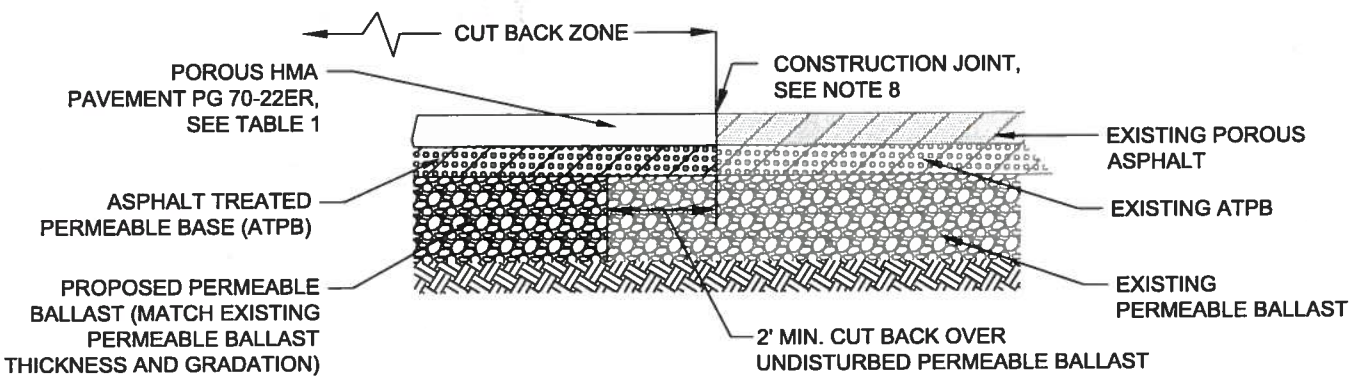

REVIEWED BY			APPROVED FOR PUBLICATION	CITY OF TACOMA TYPICAL PAVEMENT RESTORATION FOR POROUS ASPHALT PAVEMENT
DCS	GMS	KURTIS DEAN KINGSOLVER STATE OF WASHINGTON 31229 REGISTERED PROFESSIONAL ENGINEER	4/4/16	
PUBLIC WORKS	ENVIRONMENTAL SERVICES		CITY ENGINEER / DATE	STANDARD PLAN NO. SU-15C
NA	NA			
TACOMA POWER	TACOMA WATER			

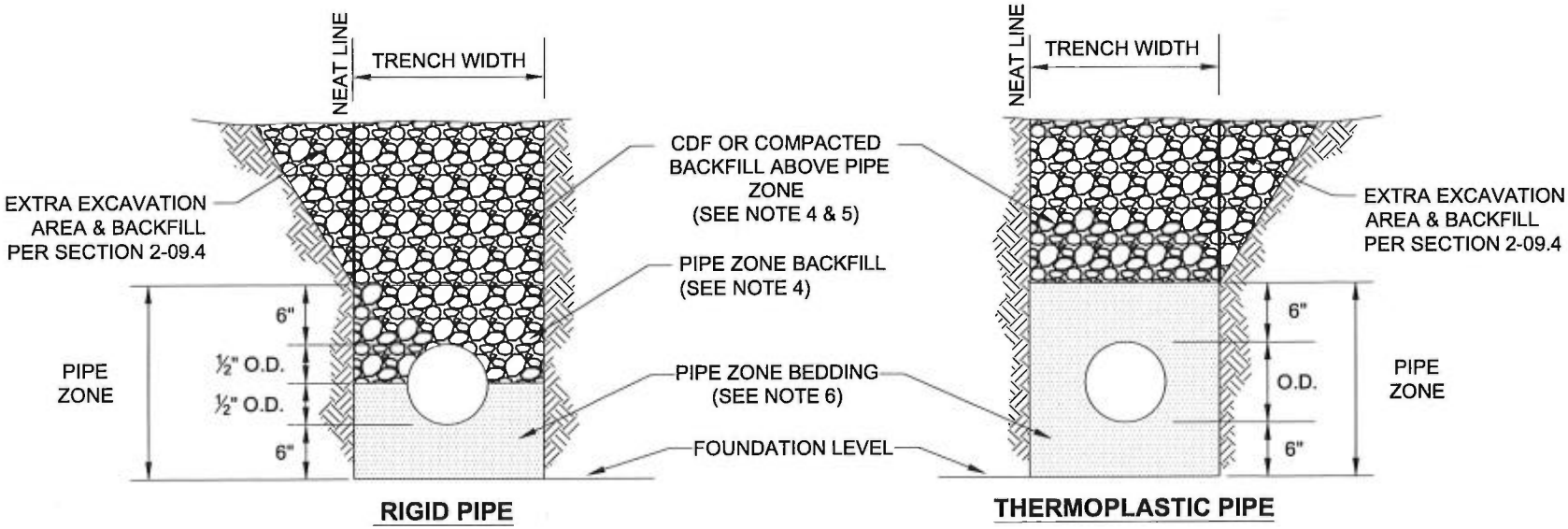

NOTES:

1. Provide uniform support under barrel and provide pockets in bedding for pipe bells.
2. Hand tamp under haunches.
3. Trench width shall be as specified in Section 2-09.4 of the WSDOT Standard Specifications.
4. Pipe zone backfill and backfill above pipe zone shall meet the material requirements of WSDOT Standard Specification Section 9-03.12(2) for gravel backfill for walls.
5. All trenches shall be compacted in accordance with SU-28.
6. Pipe zone bedding shall meet the material requirements of WSDOT Standard Specification Section 9-03.9(3) for crushed surfacing top course.

REVIEWED BY			APPROVED FOR PUBLICATION	CITY OF TACOMA PIPE ZONE BEDDING AND BACKFILL FOR SANITARY AND STORM SEWERS
DCS PUBLIC WORKS	GMS ENVIRONMENTAL SERVICES	KURTIS DEAN KINGSOLVER STATE OF WASHINGTON 31229 REGISTERED PROFESSIONAL ENGINEER	8/16/16 CITY ENGINEER DATE	STANDARD PLAN NO. SU-16
NA TACOMA POWER	NA TACOMA WATER			

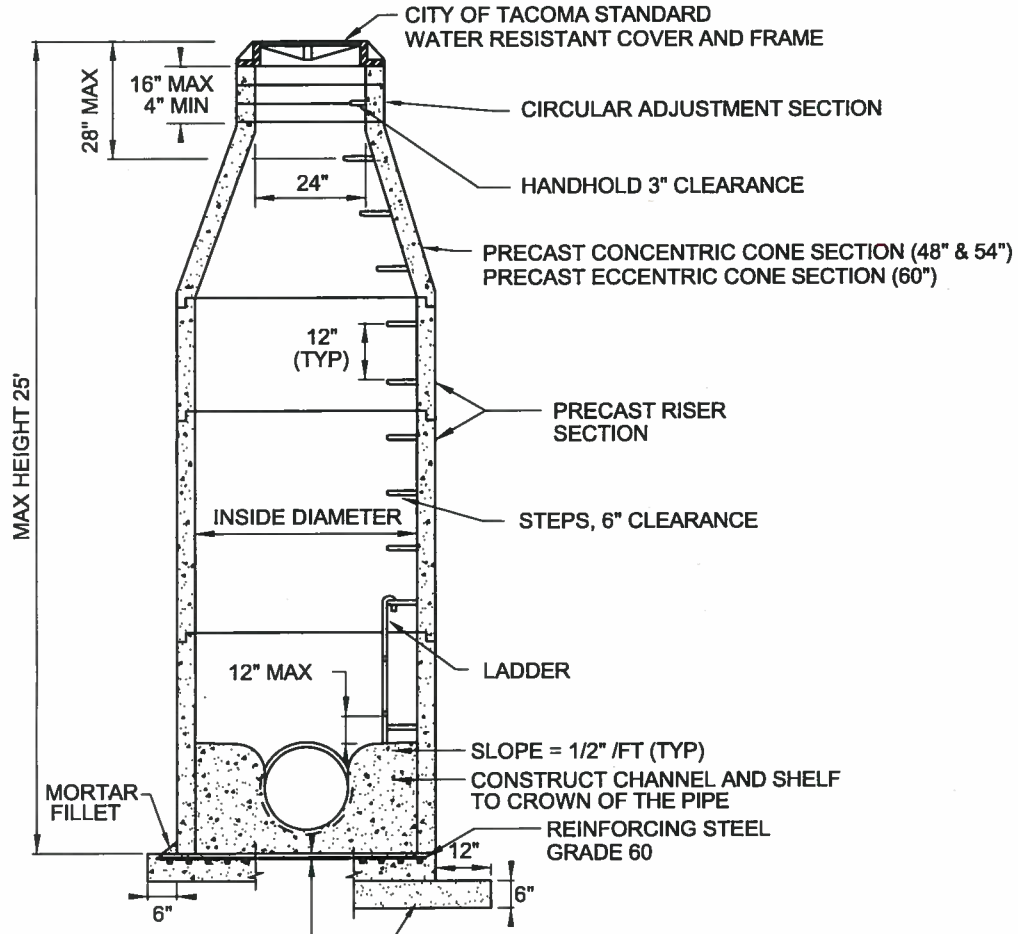

SEPARATE CAST IN PLACE BASE

PRECAST BASE WITH INTEGRAL RISER

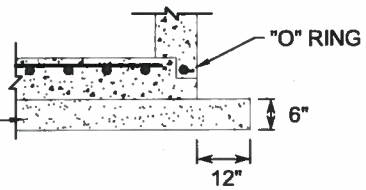

SEPARATE PRECAST BASE

NOTES:

1. For details showing grade ring, ladder, steps, handholds and top slabs, see Standard Plan No. SU-21.
2. Non-reinforced concrete in channel and shelf shall be Class 3000. All precast concrete shall be Class 4000.
3. Rubber gaskets shall be used in tongue and groove joints of pre-cast sections.
4. A flexible pipe-to-manhole connector shall be employed in all connections of rigid and flexible pipes to new precast concrete manholes. The connector shall be "Kor-N-Seal" with "Wedge Korband" manufactured by NPC, Inc., or approved equal.
5. Base reinforcing steel shall be per manufacturer's recommendation.

MANHOLE DIMENSION TABLE

INSIDE DIAMETER	MINIMUM WALL THICKNESS	MINIMUM BASE THICKNESS	MAXIMUM HOLE SIZE	MINIMUM DISTANCE BETWEEN HOLES
48"	4"	6"	36"	8"
54"	4 1/2"	8"	42"	8"
60"	5"	8"	48"	8"

CITY OF TACOMA
DEPARTMENT OF PUBLIC WORKS

APPROVED FOR PUBLICATION

CITY ENGINEER

DATE 1/17/14

MANHOLE-TYPE 1
48", 54" AND 60"

STANDARD PLAN NO. SU-17

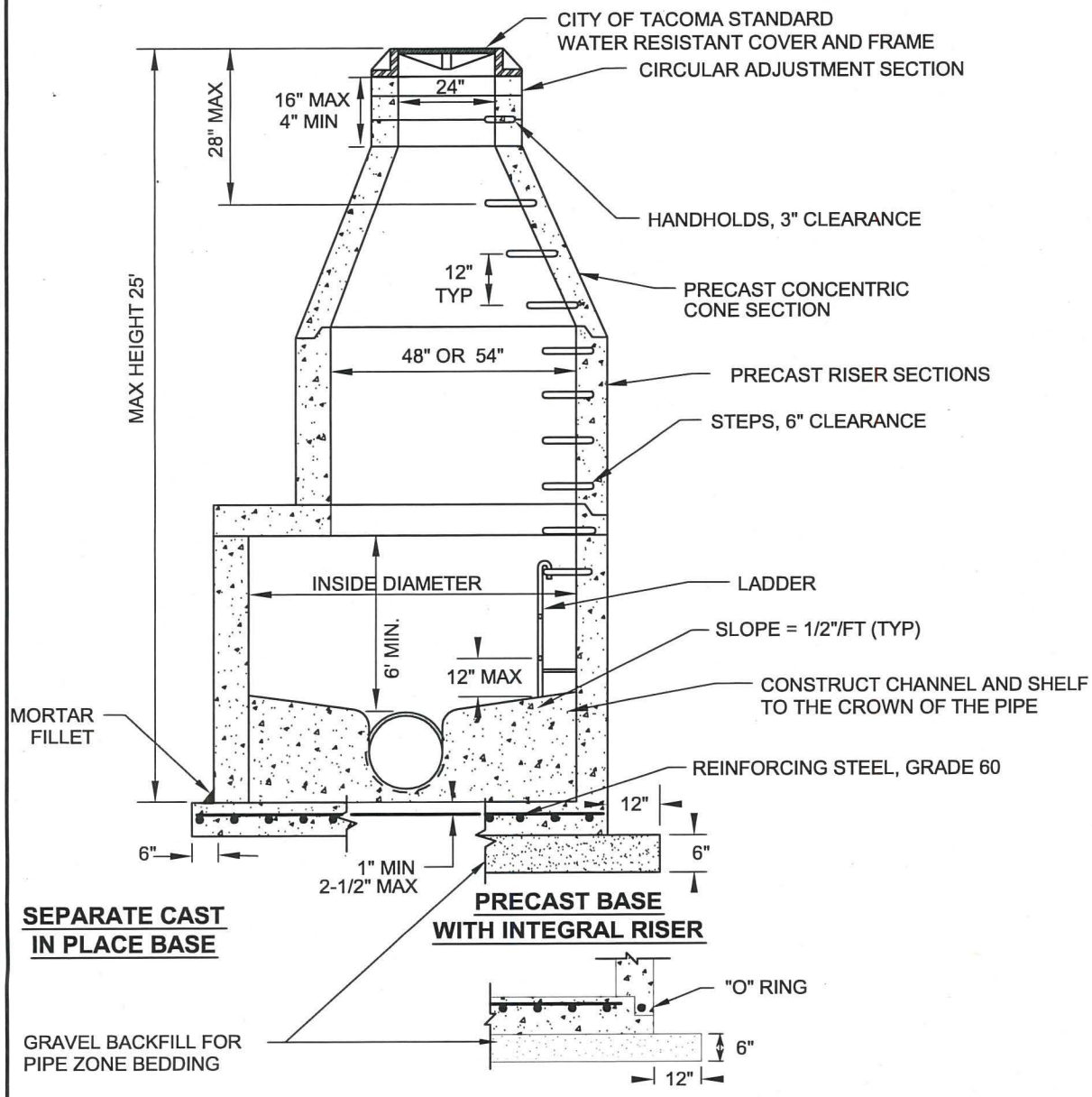

NOTES:

1. For details showing grade ring, ladder, steps, handholds and top slabs, see Standard Plan No. SU-21.
2. Non-reinforced concrete in channel and shelf shall be Class 3000. All precast concrete shall be Class 4000.
3. Rubber gaskets shall be used in tongue and groove joints of pre-cast sections.
4. A flexible pipe-to-manhole connector shall be employed in all connections of rigid and flexible pipes to new precast concrete manholes. The connector shall be "Kor-N-Seal" with "Wedge Korband" manufactured by NPC, Inc., or approved equal.
5. Base reinforcing steel shall be per manufacturer's recommendation.

MANHOLE DIMENSION TABLE

INSIDE DIAMETER	MINIMUM WALL THICKNESS	MINIMUM BASE THICKNESS	MAXIMUM HOLE SIZE	MINIMUM DISTANCE BETWEEN HOLES
72"	6"	8"	60"	12"
84"	8"	12"	72"	12"
96"	8"	12"	84"	12"
108"	10"	12"	96"	12"
120"	11"	12"	108"	12"

CITY OF TACOMA
DEPARTMENT OF PUBLIC WORKS

APPROVED FOR PUBLICATION

CITY ENGINEER

1/17/14
DATE

MANHOLE-TYPE 2
72" AND GREATER

STANDARD PLAN NO. SU-18

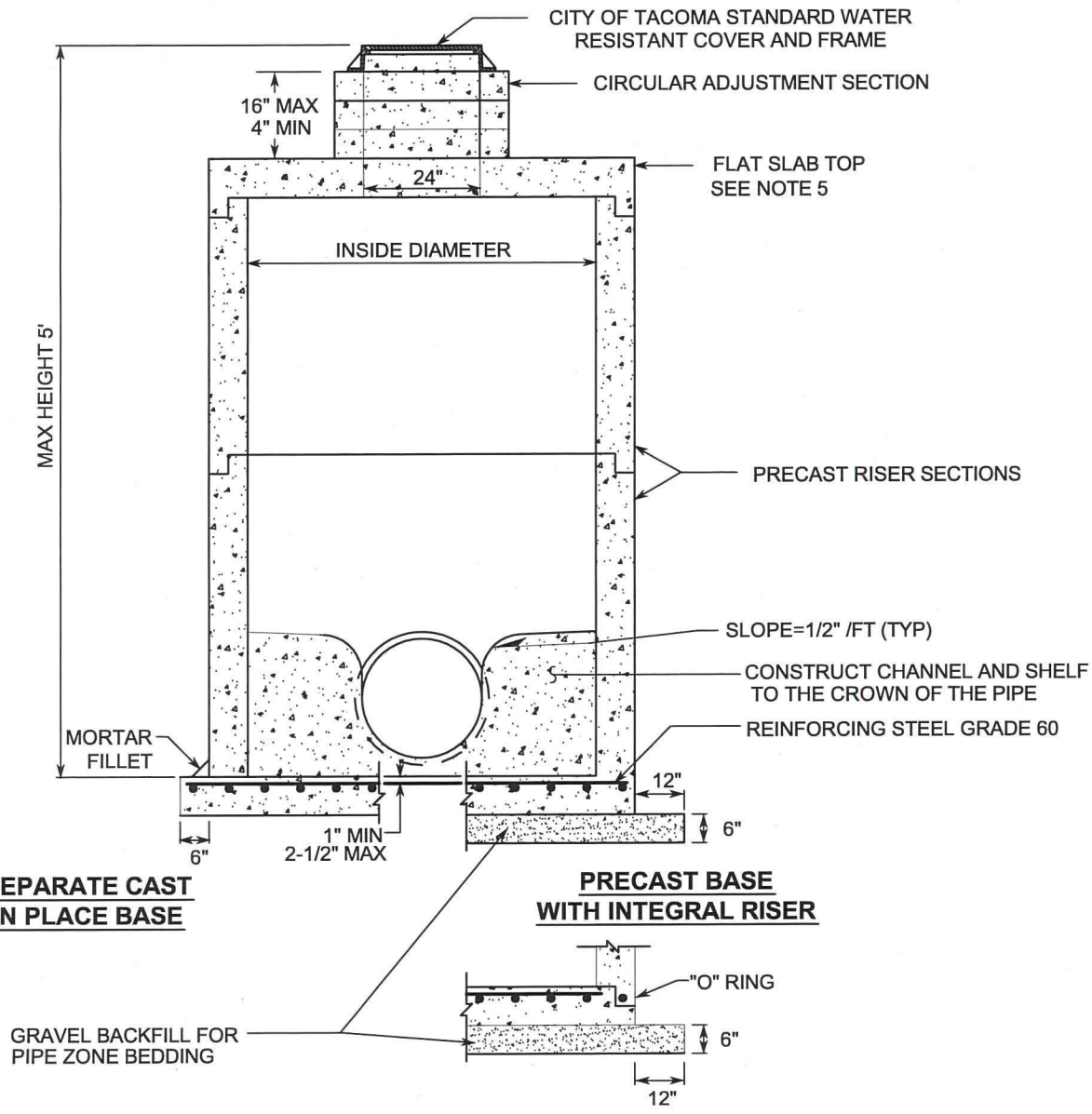

NOTES:

1. For details showing grade ring and top slabs, see Standard Plan No. SU-21.
2. Non-reinforced concrete in channel and shelf shall be Class 3000. All precast concrete shall be Class 4000.
3. Rubber gaskets shall be used in tongue and groove joints of pre-cast sections.
4. A flexible pipe-to-manhole connector shall be employed in all connections of rigid and flexible pipes to new precast concrete manholes. The connector shall be "Kor-N-Seal" with "Wedge Korband" manufactured by NPC, Inc., or approved equal.
5. Manholes shall have the access hole centered over the channel on the upstream side of the manhole.
6. Base reinforcing steel shall be per manufacturer's recommendation.

MANHOLE DIMENSION TABLE

INSIDE DIAMETER	MINIMUM WALL THICKNESS	MINIMUM BASE THICKNESS	MAXIMUM HOLE SIZE	MINIMUM DISTANCE BETWEEN HOLES
48"	4"	6"	36"	8"
54"	4 1/2"	8"	42"	8"
60"	5"	8"	48"	8"
72"	6"	8"	48"	12"
84"	8"	12"	48"	12"
96"	8"	12"	48"	12"
108"	10"	12"	48"	12"
120"	11"	12"	48"	12"

CITY OF TACOMA
DEPARTMENT OF PUBLIC WORKS

APPROVED FOR PUBLICATION

CITY ENGINEER

DATE 1/17/14

MANHOLE TYPE 3
5' MAXIMUM HEIGHT

STANDARD PLAN NO. SU-19

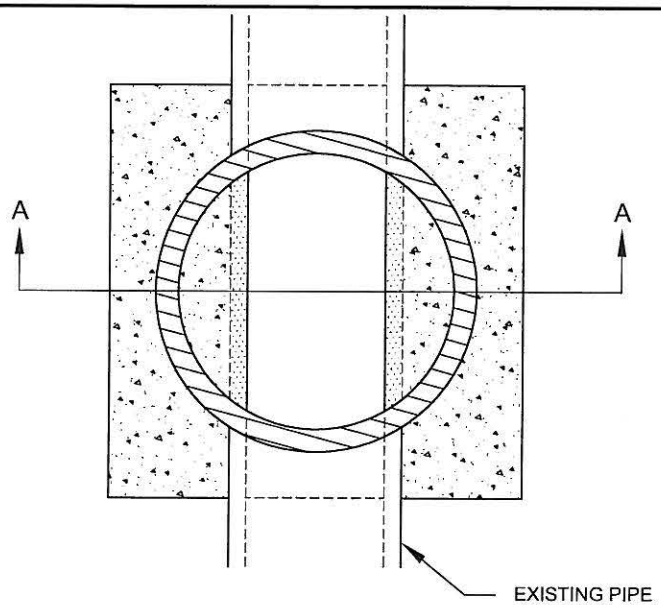

TOP VIEW

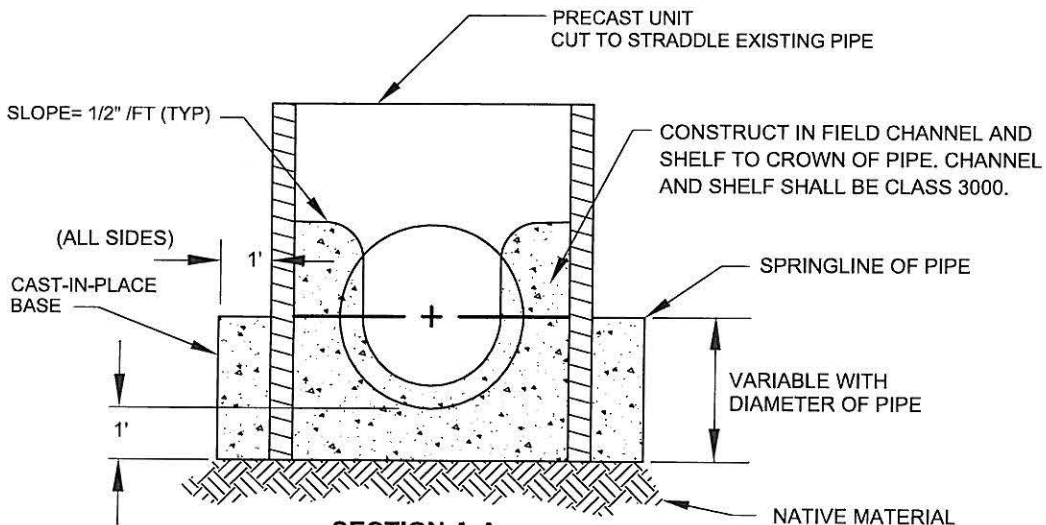

SECTION A-A

NOTES:

1. Existing pipe shall be supported at all times.
2. No weight of the precast unit shall bear on the existing pipe.
3. Concrete for cast-in-place base shall be Class 4000.
4. Cast-in-place base shall be poured to encase the precast unit.
5. Precast manhole section shall be installed in accordance with the Standard Plan for the specified manhole size and type.
6. Additional manhole sections shall not be installed until concrete base has set for 12 hours.
7. The existing main shall be left in place and the top portion of the main shall be removed. The bottom portion shall be tied in as the channel of the new manhole.
8. Grout all openings to ensure water tight structure.

CITY OF TACOMA **DEPARTMENT OF PUBLIC WORKS**	**APPROVED FOR PUBLICATION** James Parry 12 Jun 2009 CITY ENGINEER DATE	**CAST-IN-PLACE MANHOLE BASE** **STANDARD PLAN NO. SU-20**

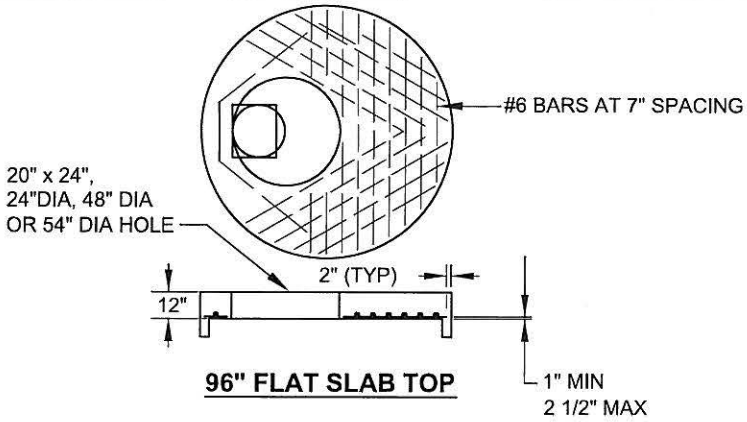

96" FLAT SLAB TOP

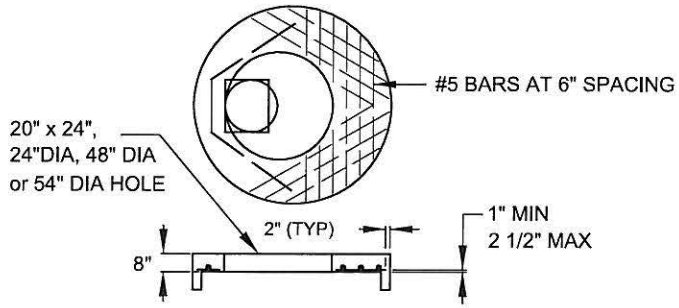

72" FLAT SLAB TOP

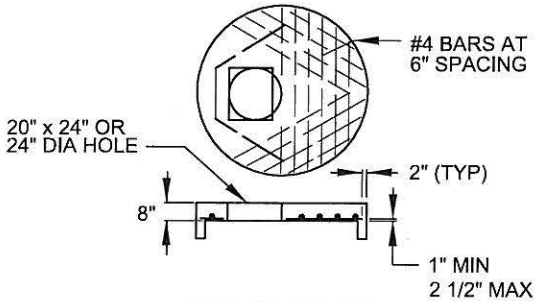

48", 54" OR 60"
FLAT SLAB TOP

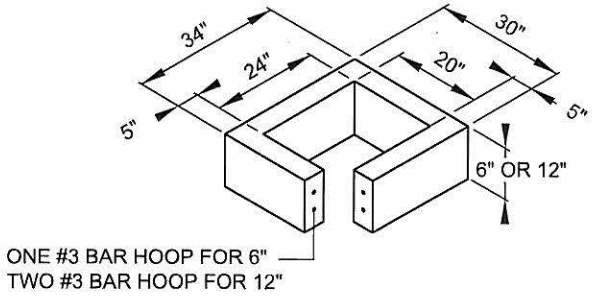

RECTANGULAR ADJUSTMENT SECTION

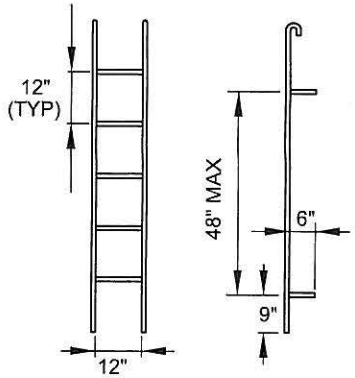

PREFABRICATED LADDER

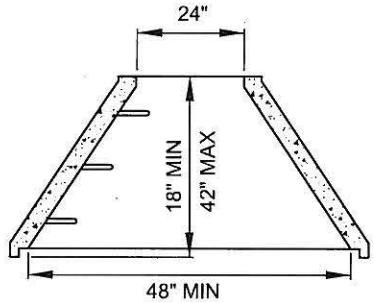

CONCENTRIC CONE SECTION

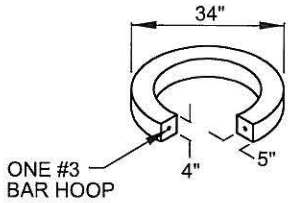

CIRCULAR ADJUSTMENT SECTION

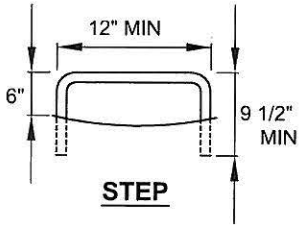

STEP

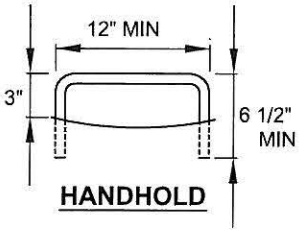

HANDHOLD

NOTE:

As an acceptable alternate to rebar, wire mesh having a minimum area of 0.12 square inches per foot may be used for adjustment sections.

CITY OF TACOMA **DEPARTMENT OF PUBLIC WORKS**	**APPROVED FOR PUBLICATION** CITY ENGINEER — DATE: 12 Jun 2009	**MISCELLANEOUS DETAILS FOR MANHOLES AND CATCH BASINS** **STANDARD PLAN NO. SU-21**

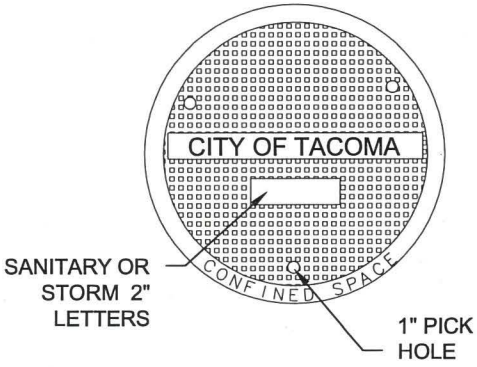

PLAN VIEW

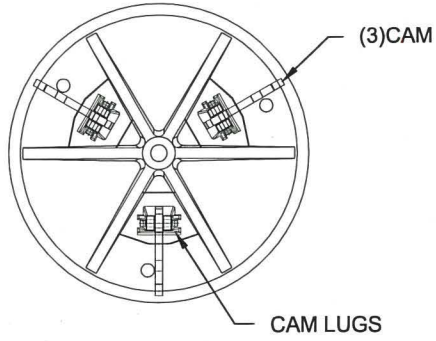

BOTTOM VIEW

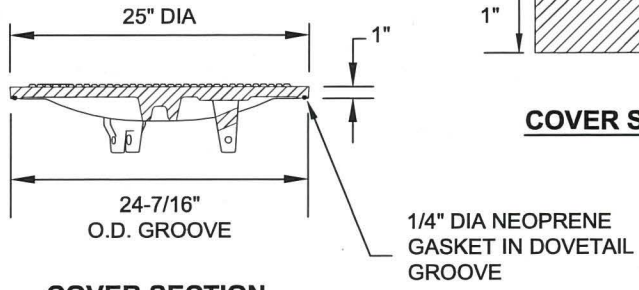

COVER SECTION

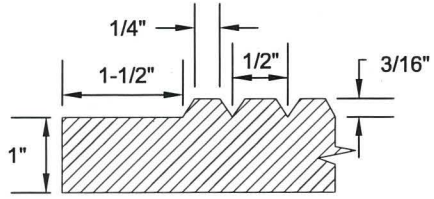

COVER SKID DESIGN

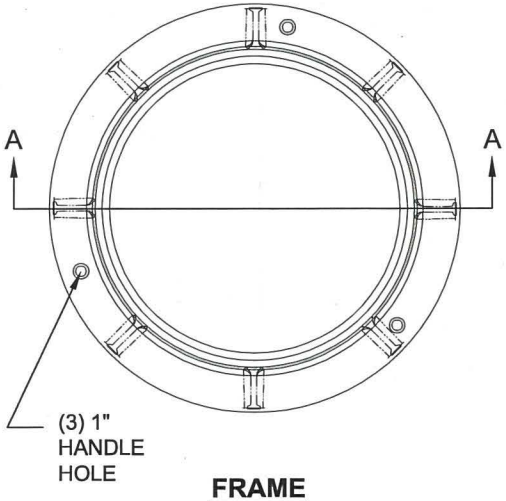

FRAME

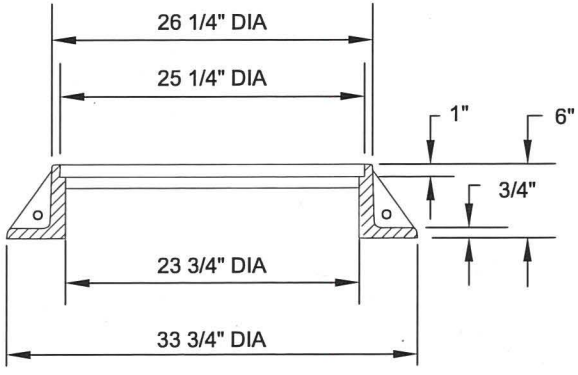

SECTION A-A

NOTES:

1. Covers shall have the word "SANITARY" in 2 inch raised letters when used with sanitary sewer installations, or "STORM" when installed with storm sewers. All covers shall have the words "CITY OF TACOMA" in 1-1/2 inch raised letters and the words "CONFINED SPACE" in 1-inch raised letters.
2. Lids must be interchangeable, any lid shall fit any and all frames.
3. Frame and cover shall be designed for H-20 loading.
4. Frame shall be grey-iron conforming to the requirements of AASHTO M 105, grade 30B.
5. Covers shall be ductile iron conforming to ASTM A 536, grade 80-55-06.
6. Per WSDOT Standard Specification 9-05.15, metal castings shall not be dipped, painted, welded, plugged, or repaired.

CITY OF TACOMA **DEPARTMENT OF PUBLIC WORKS**	**APPROVED FOR PUBLICATION** CITY ENGINEER — DATE 1/17/04	**MANHOLE FRAME AND COVER** **STANDARD PLAN NO. SU-22**

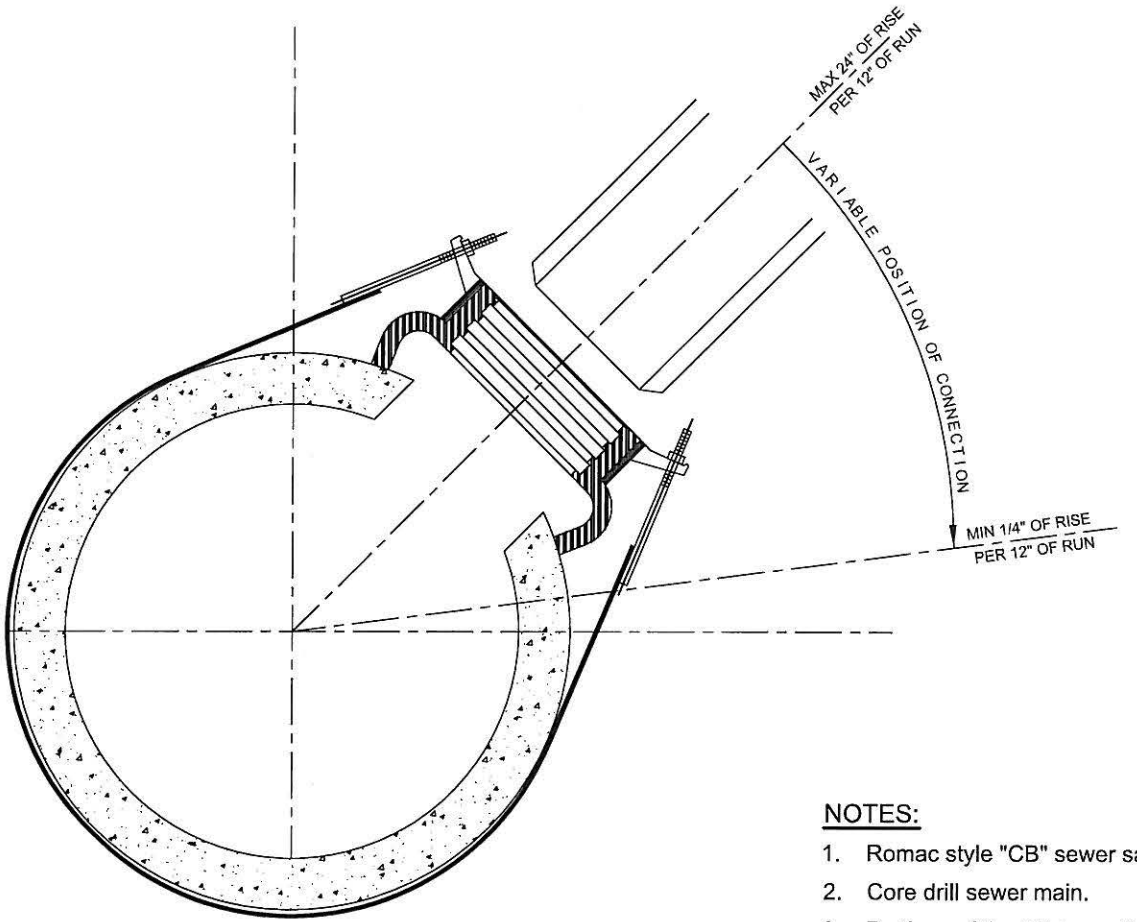

SANITARY SEWER MAIN
CROSS SECTION

NOTES:

1. Romac style "CB" sewer saddle or approved equal.
2. Core drill sewer main.
3. Portions of the City's sanitary sewer system have been lined. If a lined pipe is encountered during connection of the new side sewer, the Construction Division shall be contacted at (253) 591-5760 for further instructions.
4. Sewer laterals shall not extend beyond the interior wall of the sanitary sewer main.

CITY OF TACOMA DEPARTMENT OF PUBLIC WORKS	APPROVED FOR PUBLICATION James Parvey — 12 JUN 2009 CITY ENGINEER — DATE	LATERAL SEWER CONNECTION TO SANITARY SEWER MAIN STANDARD PLAN NO. SU-23

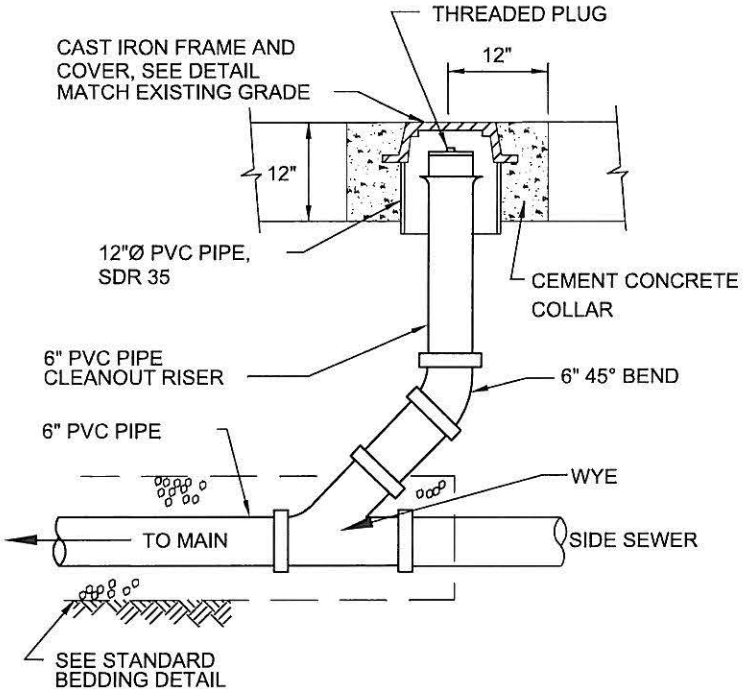

CLEANOUT DETAIL

NOT TO SCALE

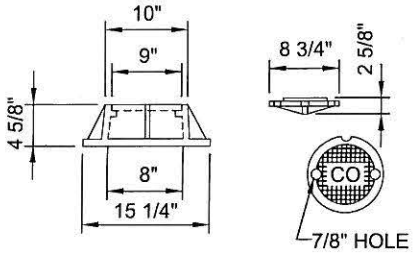

FRAME AND COVER DETAIL

NOT TO SCALE

NOTE:

When no curb and gutter or sidewalk exist, locate cleanout in future planting strip.

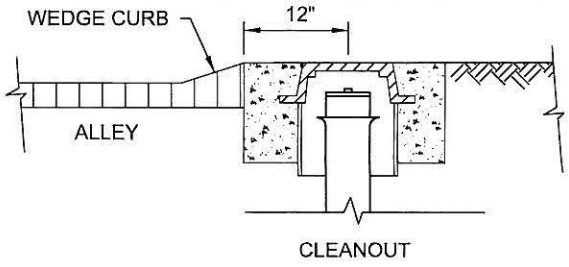

TYPICAL ALLEY SECTION

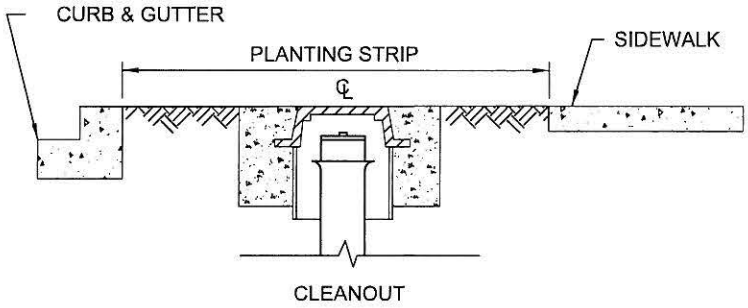

TYPICAL SIDEWALK SECTION

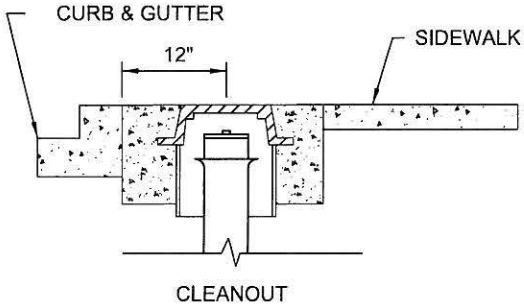

TYPICAL COMBINATION SIDEWALK SECTION

STANDARD CLEANOUT LOCATION

NOT TO SCALE

CITY OF TACOMA **DEPARTMENT OF PUBLIC WORKS**	**APPROVED FOR PUBLICATION** CITY ENGINEER — DATE: 12 Jun 2009	**SIDE SEWER CLEANOUT AND COVER DETAIL** **STANDARD PLAN NO. SU-24**

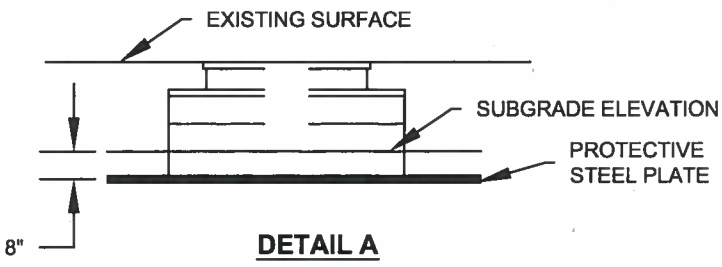

DETAIL A

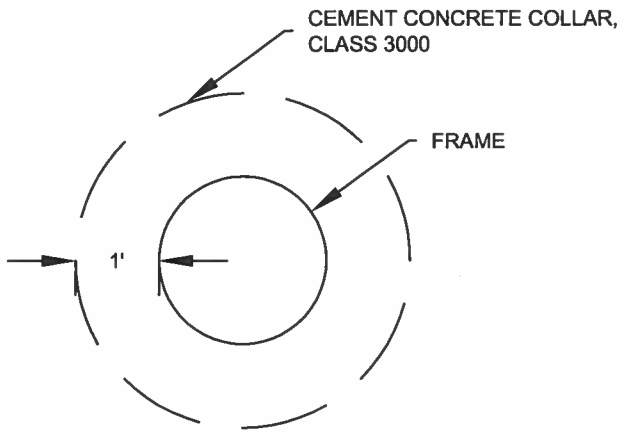

DETAIL B

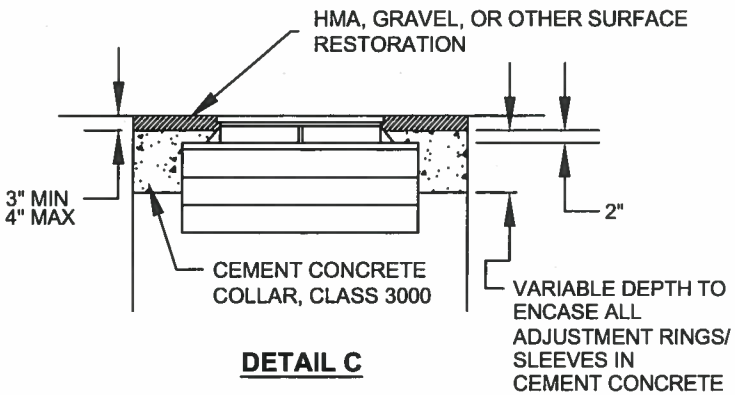

DETAIL C

PROGRESSION OF WORK

PRIOR TO EXCAVATING OR RESURFACING:

Contractor shall:
Remove frame and risers to a depth 8-inches below subgrade.
Install steel protective plate in accordance with Detail A.
Reference the location of the utility structure.

CONSTRUCTION OF SURFACING:

Gravel surfacing:
Install base materials and gravel over protective steel plate.

Asphalt surfacing:
Install base materials and asphalt over protective steel plate.

Concrete surfacing:
Adjust frame and grate to final grade prior to placing concrete surfacing.

UPON COMPLETION OF SURFACING:

The asphalt concrete pavement or gravel surfacing shall be removed in a neat circle in accordance with Detail B.

The location of the asphalt or gravel removal shall be based upon the reference location established by the Contractor.

Crushed surfacing and base materials shall be removed and disposed of to allow the removal of the steel protective plate.

The structure shall be adjusted to finish grade utilizing the same methods of construction as specified for new construction in Section 7-05.

For hot mix asphalt, the area shall then be backfilled with Class 3000 cement concrete to an elevation of 3 to 4 inches below the finished pavement surface. 24-hours after placing the concrete, HMA pavement CL. 3/8" PG 64-22 shall be placed in accordance with Standard Plan No. SU-15.

For non-paved surfaces, the area shall be backfilled with Class 3000 cement concrete to an elevation of 3 to 4 inches below the top of the casting and then backfilled with crushed surfacing top course and compacted.

NOTE:

All general provisions, construction and warranty requirements of the Right of Way Restoration Policy will be followed.

CITY OF TACOMA **DEPARTMENT OF PUBLIC WORKS**	**APPROVED FOR PUBLICATION** CITY ENGINEER — DATE 4/25/14	**UTILITY ADJUSTMENT** **STANDARD PLAN NO. SU-25**

ABBREVIATIONS

F.C.....	FACE OF CURB
C.G.....	CURB GRADE
F.L.....	FLOW LINE
F.WALL...	FACE OF WALL
SH.GR....	SHOULDER GRADE
C.B.....	CATCH BASIN
M.H.....	MAN HOLE
L.H.....	LAMP HOLE
S.G.....	SUBGRADE
B.G.....	BALLAST GRADE
CR.R.GR.	CRUSHED ROCK GRADE
P.C.....	POINT OF CURVATURE
P.T.....	POINT OF TANGENCY
V.C.....	VERTICAL CURVE
E.P.....	EDGE OF PAVING

* DESIGNATES DISTANCE FROM GUARD STAKE TO GRADE OR LINE HUB. (OPTIONAL)

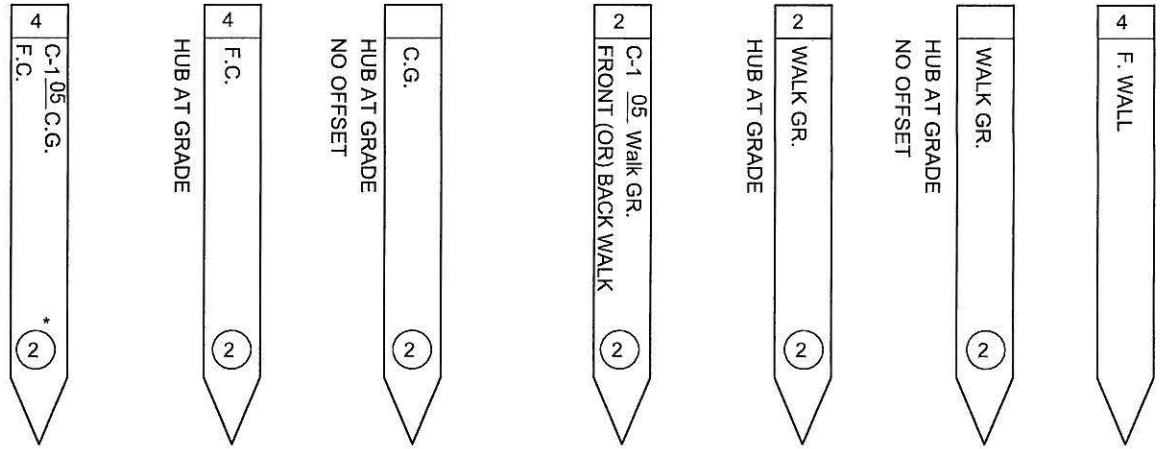

STAKES SHALL HAVE STATIONS ON BACK SIDE

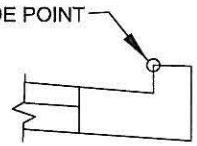

CURBS

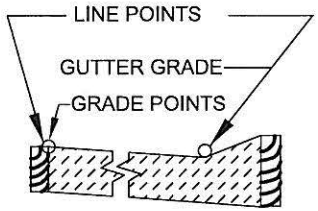

ALLEY SLABS

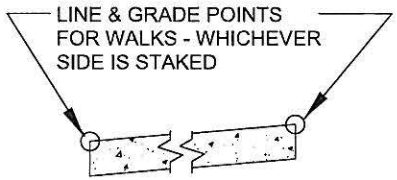

WALKS

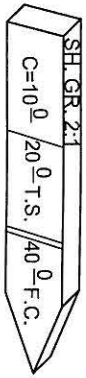

SLOPE STAKES

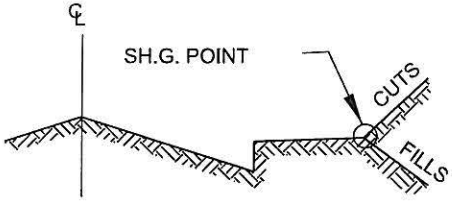

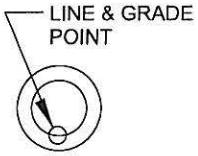

SEWERS

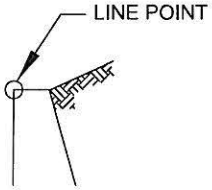

WALLS

SIDE OR BACK

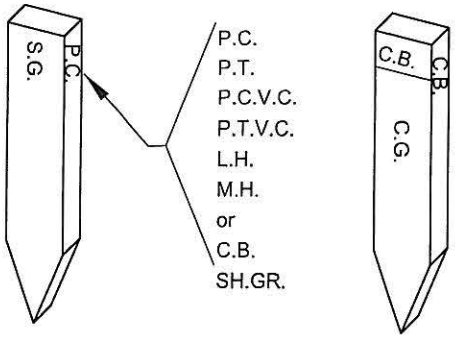

CITY OF TACOMA DEPARTMENT OF PUBLIC WORKS	APPROVED FOR PUBLICATION James Powers 12 Jun 2004 CITY ENGINEER DATE	STANDARD PROCEDURE FOR MARKING CONSTRUCTION STAKES STANDARD PLAN NO. SU-26

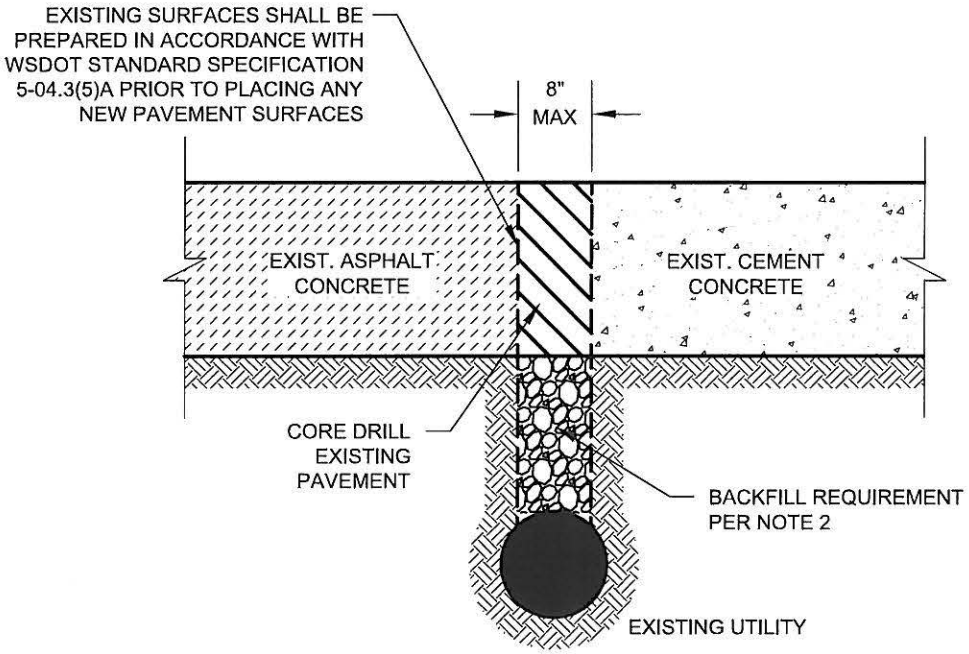

NOTES:

1. The existing pavement shall be cut full depth with an eight inch diameter core drill. The subbase material shall be removed using a vacuum excavator, keeping the excavation as minimal as possible.
2. Backfill the excavation with a six inch cushion of crushed rock over the utility then place the remaining void with CDF or compacted CSTC.
3. For asphalt concrete streets, repair the cored pavement section with HMA Class ½" PG 64-22 and seal the joint.
4. For cement concrete pavement streets, replace the cored section with Class 6000 cement concrete.
5. If excavation is larger than 8" core, restoration shall comply with the Right of Way Restoration Policy.

CITY OF TACOMA DEPARTMENT OF PUBLIC WORKS	APPROVED FOR PUBLICATION CITY ENGINEER — DATE 12 Jun 2009	POTHOLING STANDARD PLAN NO. SU-27

COMPACTION TESTING REQUIREMENTS [A]		
DEPTH	TESTING FREQUENCY [C]	
	VERTICAL	HORIZONTAL
SURFACE (BELOW HMA)	N/A	1 TEST EVERY 150 LINEAR FEET OF TRENCH OR MINIMUM 2 PER TRENCH
		1 TEST FOR 150 SQUARE FEET FOR ISOLATED PATCHES[B]
1 TO 4 FEET (OR MIN 18 IN. ABOVE PIPE)	1 EVERY 12 INCHES	SAME AS FOR SURFACE
> 4 FEET TO BOTTOM OF TRENCH	NO SPECIFIC REQUIREMENT - MAY BE REQUIRED BY COT INSPECTOR FOR VERIFICATION OF COMPACTION	

A. TESTING SHALL BE PERFORMED BY A CERTIFIED INDEPENDENT TESTING LABORATORY OR A CERTIFIED TESTOR AS APPROVED BY THE CITY'S CONSTRUCTION DIVISION. THE COST OF TESTING IS THE RESPONSIBILITY OF THE PERMITTEE. TESTS SHALL BE COMPLETED AND REPORTS IDENTIFYING THE PROJECT NUMBER SUBMITTED TO THE CONSTRUCTION DIVISION WITHIN 48 HOURS OF TESTS.
B. ONLY ONE COMPACTION TEST WILL BE REQUIRED FOR MULTIPLE TRENCHES WITHIN A 150 SF AREA PROVIDED COMPACTION PROCEDURES ARE THE SAME.
C. EACH LIFT SHALL BE COMPACTED TO 95% MODIFIED PROCTOR DENSITY, AS VERIFIED BY COMPACTION TESTING, BEFORE PROCEEDING TO THE NEXT LIFT. COT INSPECTOR MAY REQUIRE EXCAVATION AND REMOVAL OF SOIL WHERE COMPACTION IS IN QUESTION.

NOTES:

1. Compact backfill material in max. 12 in. lifts. Compact backfill material to 95% max. modified proctor density (ASTM 1557) except directly over pipe, hand tamp only.
2. Native backfill will require laboratory testing to determine max. modified proctor density. Imported backfill will require submittal of proctor test results from supplier.
3. See WSDOT Standard Specification Section 2-09.3(1)E for material requirements on "Controlled Density Fill" (CDF). CDF may be used for trenches less than 24 in. wide or as approved by the City Engineer. CDF shall be vibrated/compacted.

CITY OF TACOMA DEPARTMENT OF PUBLIC WORKS	APPROVED FOR PUBLICATION CITY ENGINEER — DATE 11/30/06	TRENCH BACKFILL COMPACTION REQUIREMENTS STANDARD PLAN NO. SU-28

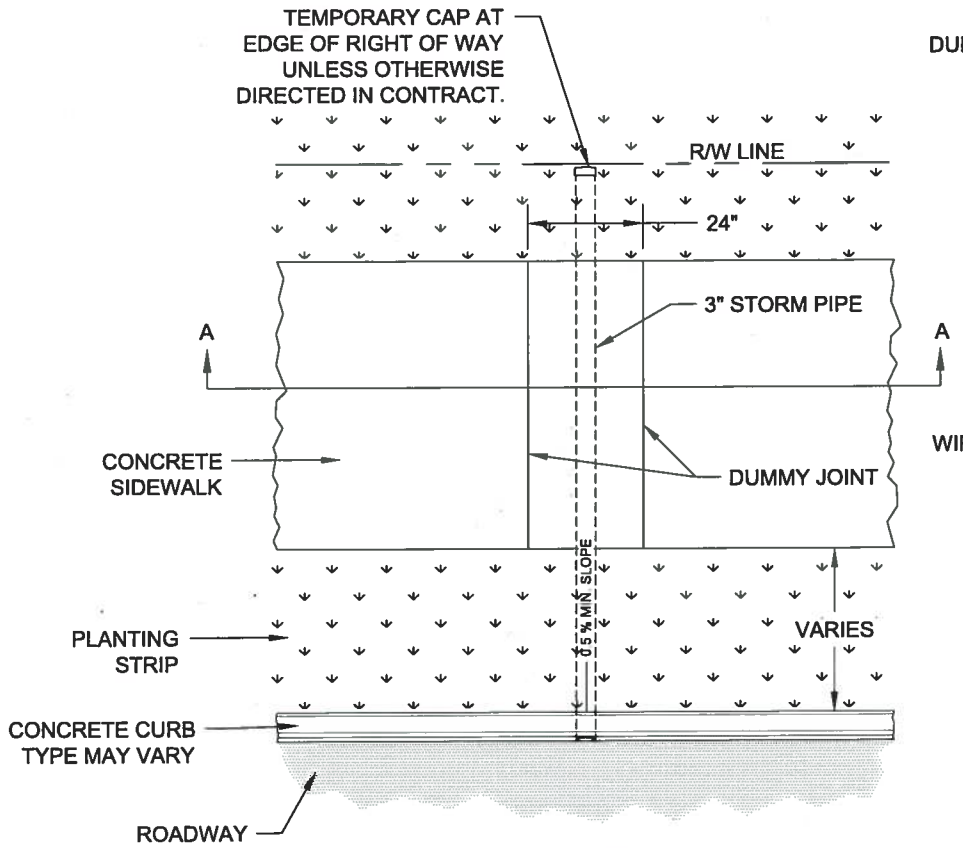

PLAN
NTS

(REINFORCEMENT NOT SHOWN)

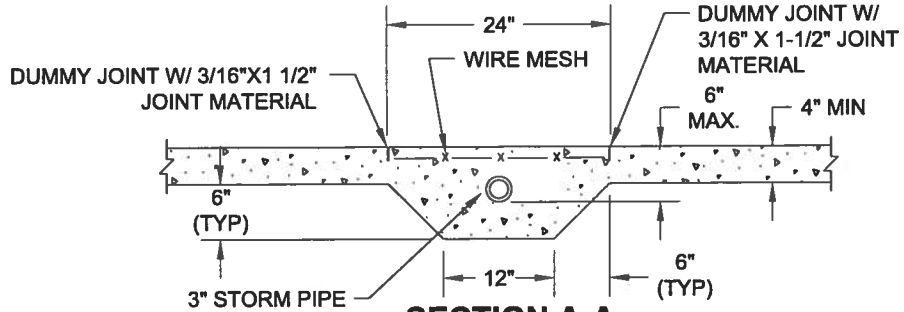

SECTION A-A
NTS

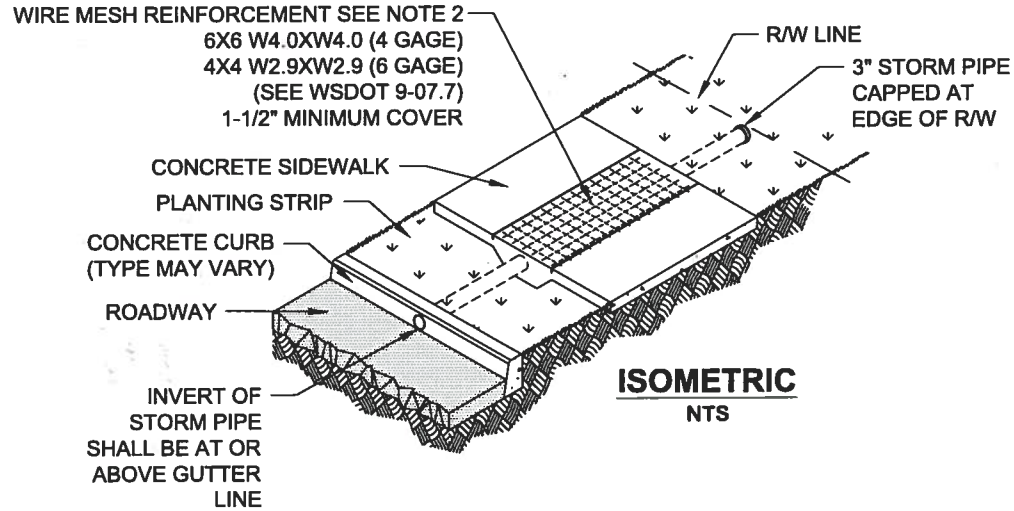

ISOMETRIC
NTS

NOTES:

1. For new pervious concrete sidewalk, place joint directly over centerline of pipe. When placing pipe under existing pervious sidewalk, restoration with impervious concrete will be allowed.
2. No mesh reinforcement to be used for pervious sidewalks.
3. Storm pipe shall be per the City Stormwater Management Manual Volume 3 for pipes within the right-of-way.

REVIEWED BY		APPROVED FOR PUBLICATION	CITY OF TACOMA STORM PIPE THROUGH CONCRETE CURB
DCS PUBLIC WORKS	(GMS) ENVIRONMENTAL SERVICES	4/4/16 CITY ENGINEER DATE	STANDARD PLAN NO. SU-29
NA TACOMA POWER	NA TACOMA WATER		

KURTIS DEAN KINGSOLVER STATE OF WASHINGTON 31229 REGISTERED PROFESSIONAL ENGINEER

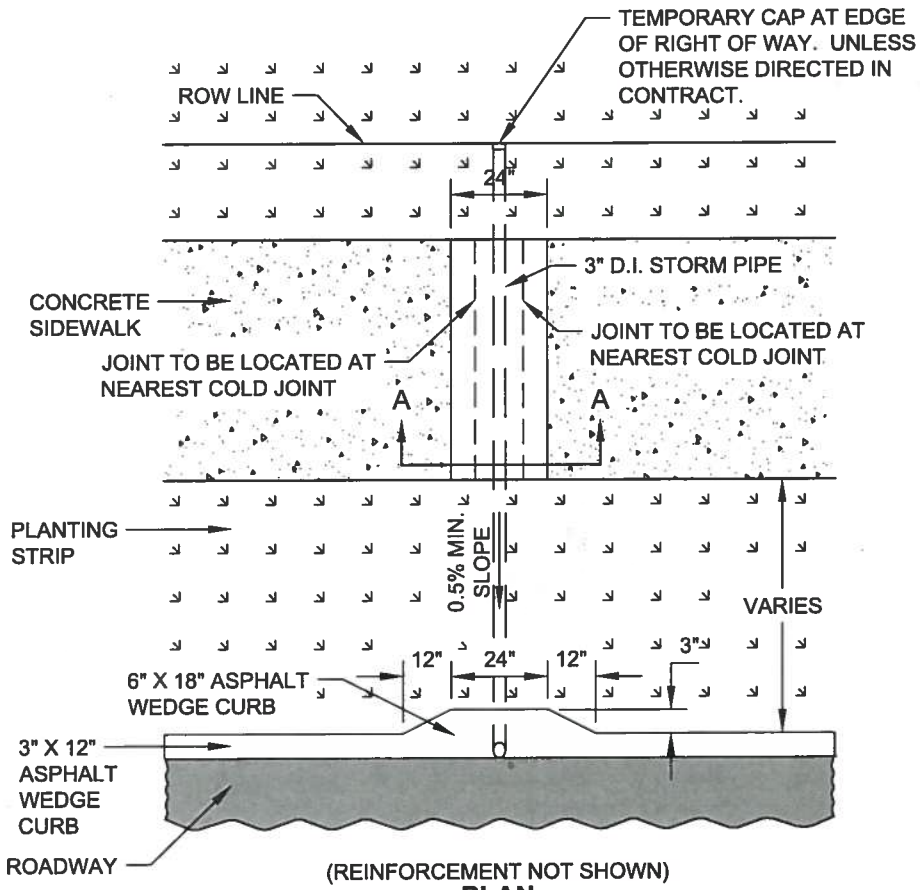

(REINFORCEMENT NOT SHOWN)

PLAN
NTS

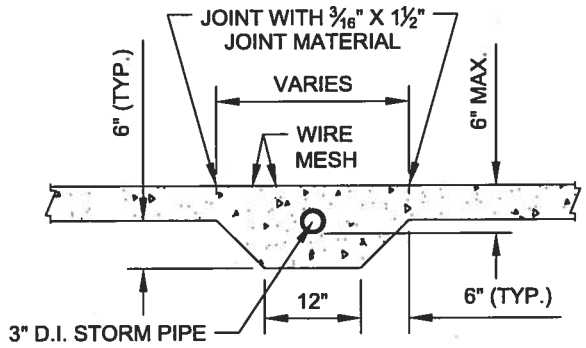

SECTION DETAIL A-A
NTS

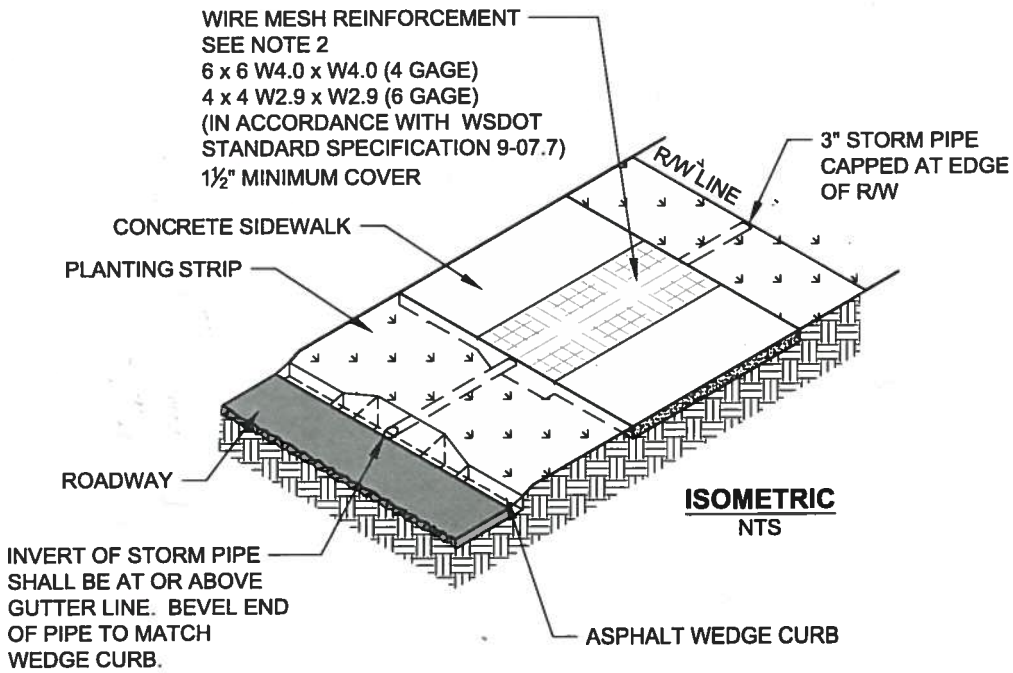

ISOMETRIC
NTS

NOTES

1. For new pervious concrete sidewalk, place joint directly over centerline of pipe. When placing pipe under existing pervious sidewalk, restoration with impervious concrete will be allowed.
2. No mesh reinforcement shall be used in pervious sidewalks.
3. Storm pipe material shall be ductile iron per the City Stormwater Management Manual Volume 3, for pipes within the Right-of-Way.

REVIEWED BY			APPROVED FOR PUBLICATION	CITY OF TACOMA STORM PIPE THROUGH ASPHALT WEDGE CURB CONNECTION
DCS	GMS	KURTIS DEAN KINGSOLVER STATE OF WASHINGTON 31229 REGISTERED PROFESSIONAL ENGINEER	4/4/15	
PUBLIC WORKS	ENVIRONMENTAL SERVICES		CITY ENGINEER — DATE	STANDARD PLAN NO. SU-29A
NA	NA			
TACOMA POWER	TACOMA WATER			

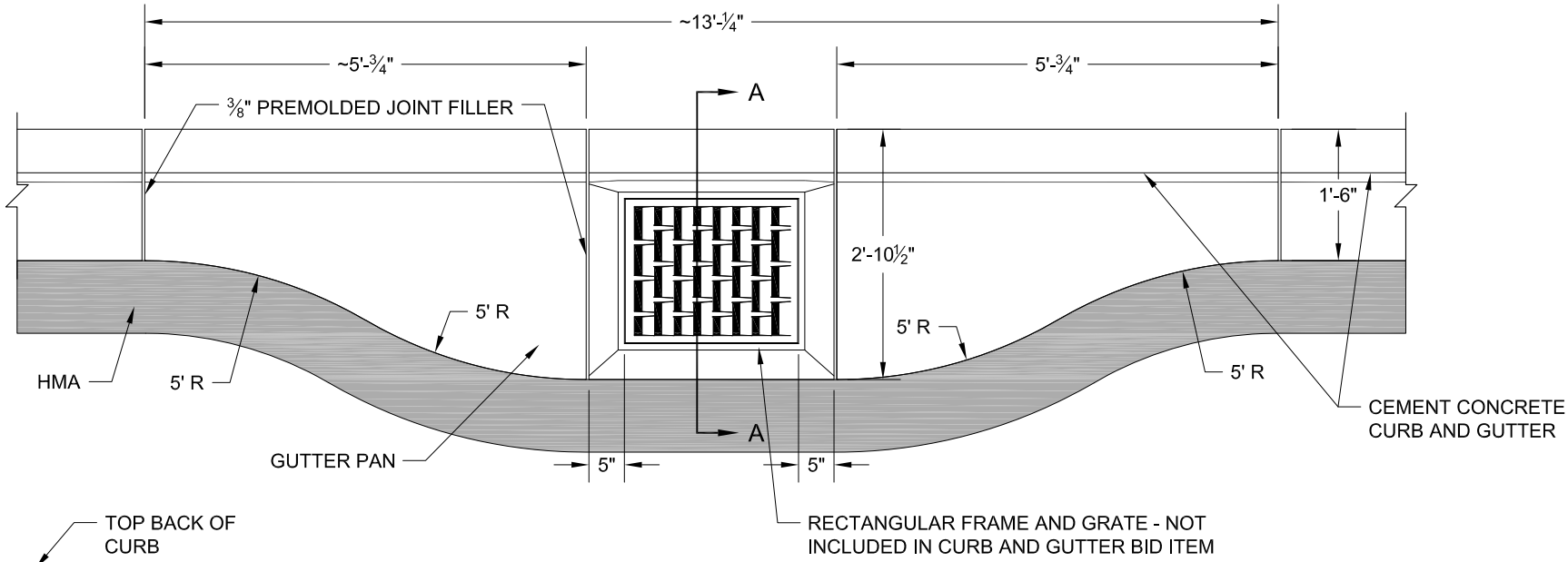

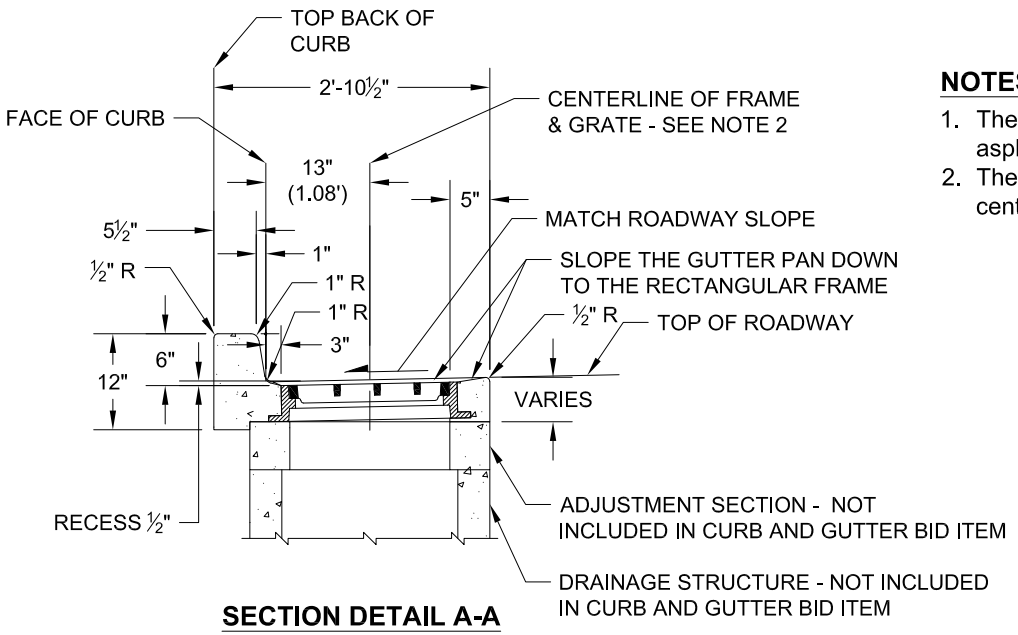

SECTION DETAIL A-A

NOTES:

1. The intent of this design is to facilitate the compaction of hot mix asphalt pavement adjacent to a drainage structure.
2. The centerline of the drainage structure may differ from the centerline of the frame and grate.

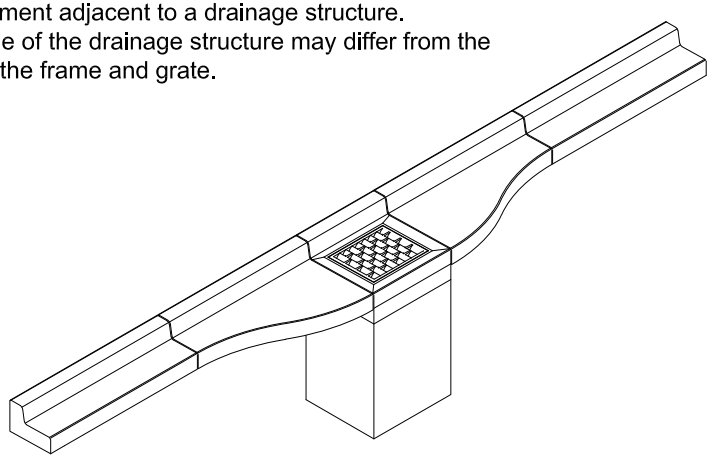

RVDR PUBLIC WORKS TACOMA POWER	REVIEWED BY EW ENVIRONMENTAL SERVICES TS TACOMA WATER	KURTIS DEAN KINGSOLVER STATE OF WASHINGTON 31229 REGISTERED PROFESSIONAL ENGINEER	APPROVED FOR PUBLICATION kurtis kingsolver 04/19/2021 CITY ENGINEER DATE

CITY OF TACOMA

CEMENT CONCRETE CURB AND GUTTER PAN

STANDARD PLAN NO. SU-30

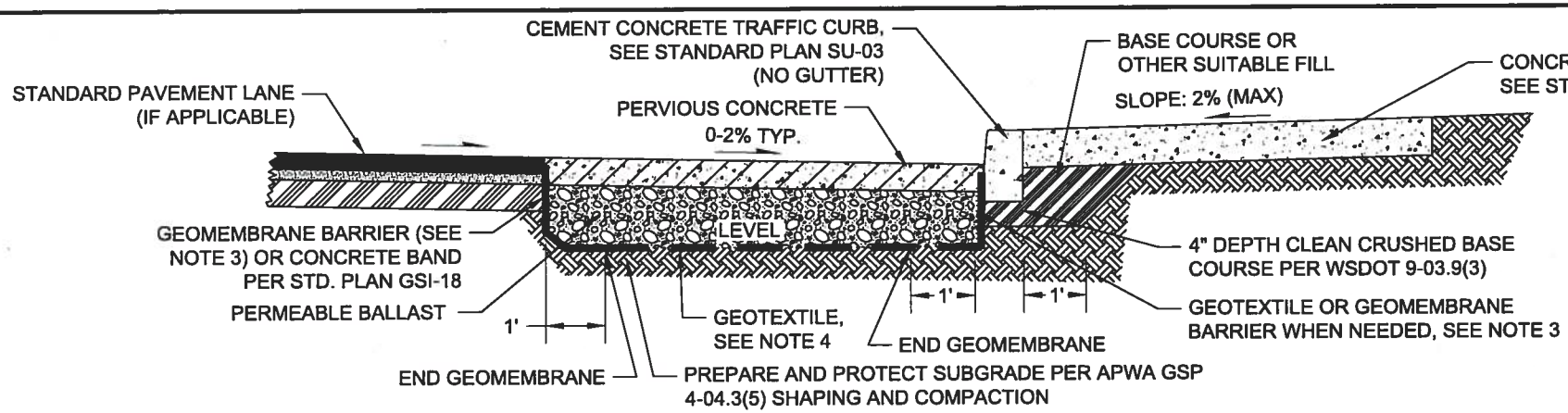

PERVIOUS CONCRETE
NTS

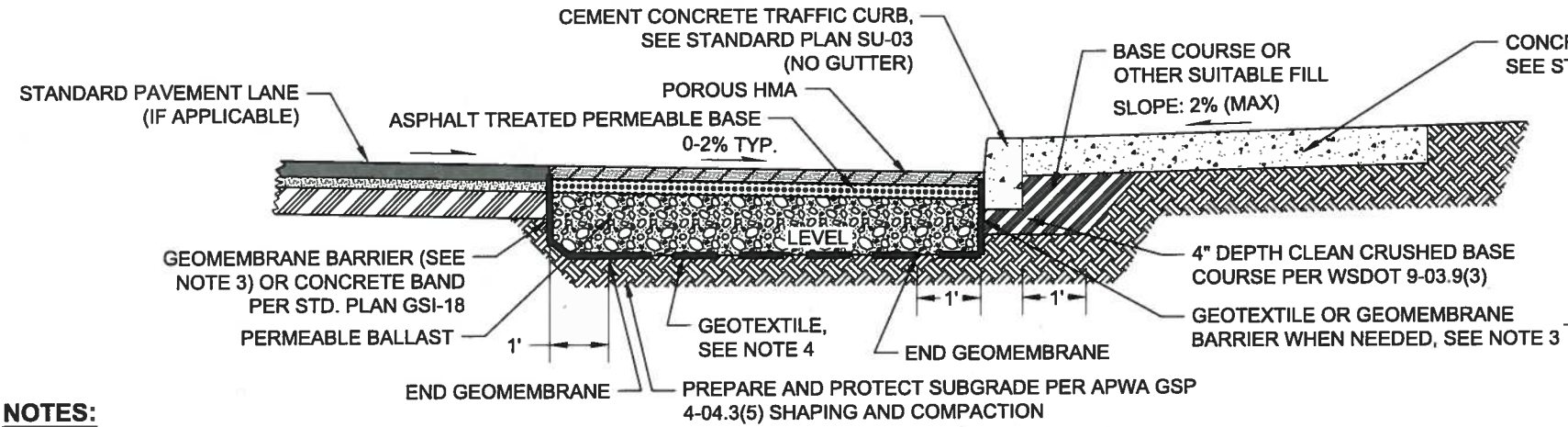

POROUS ASPHALT
NTS

NOTES:

1. Permeable ballast shall meet APWA GSP 4-04.2 Gravel Base and 9-03.9(2) Permeable Ballast Opt1 and shall be installed per APWA GSP 4-04.3(5) Shaping and Compaction.
2. Minimum surface longitudinal slope shall be 0.5%.
3. Geomembrane barrier shall provide an impermeable barrier between standard and permeable section. Geomembrane may also be required at the shoulder side of the road. It shall be installed 1" below finished grade of surfacing, as shown. Alternatively, the liner shall fold over the permeable ballast a minimum of 6". Geomembrane barrier seams shall overlap at least 18" or per manufacturer's recommendations. Geomembrane barrier shall extend the length of the permeable section when adjacent to standard pavement. See Std. Plan GSI-18.
4. Geotextile to be provided when recommended by geotechnical professional and shall be required when fines in native subgrade exceed 7% on the #200 sieve.
5. Geotextile for separation per WSDOT 9.33.2(1), woven, Table 3 and installed per WSDOT 2-12.3(1).
6. See Std. Plan PD-01 for minimum pavement section.
7. Permeable pavement surfacing shall meet APWA GSP 5-04.3 Construction Requirements Porous Asphalt (PHMA/PWMA) Acceptance Infiltration Test for porous asphalt or 5-06.3(6)A Infiltration Rate of the Placed Pavement for pervious concrete.
8. Permeable ballast may be extended under curb and sidewalk when approved, see Std. Plan SU-31b.

REVIEWED BY		APPROVED FOR PUBLICATION	CITY OF TACOMA PERMEABLE ROADWAY WITH IMPERVIOUS SIDEWALK
DCS PUBLIC WORKS	GMS ENVIRONMENTAL SERVICES	4/26/16 CITY ENGINEER DATE	STANDARD PLAN NO. SU-31a
NA TACOMA POWER	NA TACOMA WATER		

KURTIS DEAN KINGSOLVER STATE OF WASHINGTON 31229 REGISTERED PROFESSIONAL ENGINEER

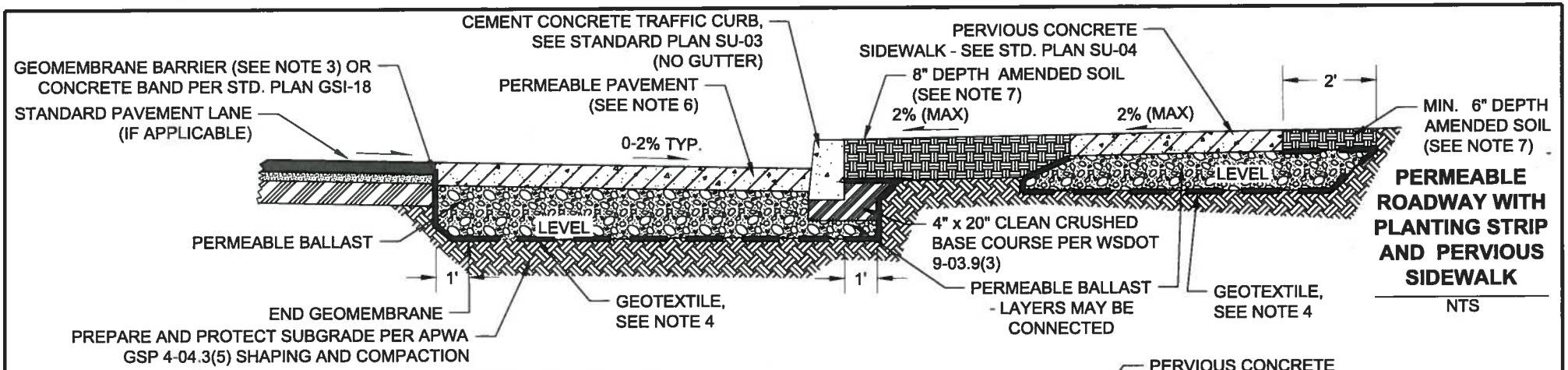

PERMEABLE ROADWAY WITH PLANTING STRIP AND PERVIOUS SIDEWALK

NTS

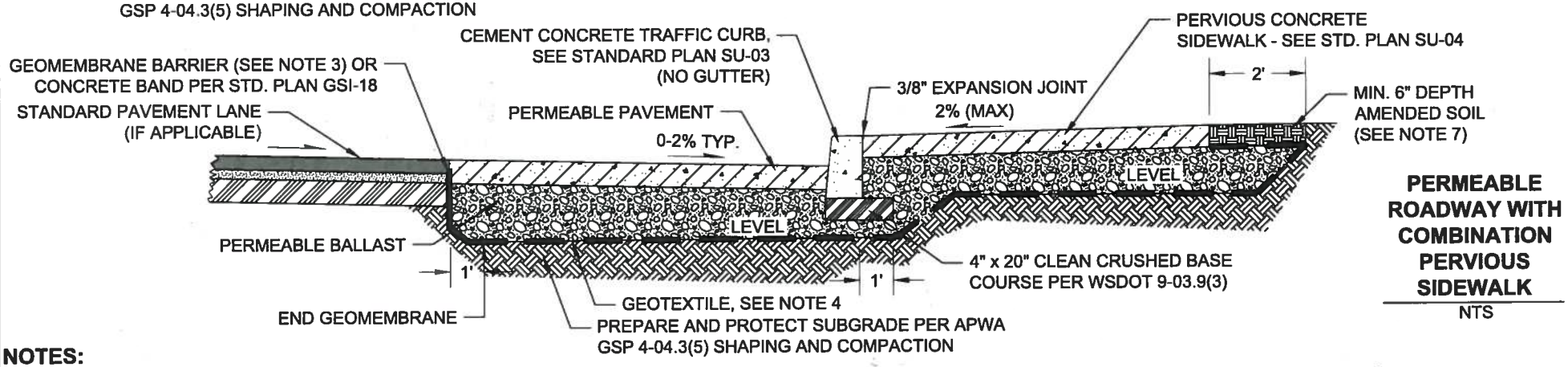

PERMEABLE ROADWAY WITH COMBINATION PERVIOUS SIDEWALK

NTS

NOTES:

1. Permeable ballast shall meet APWA GSP 4-04.2 Gravel Base and 9-03.9(2) Permeable Ballast Opt1 and shall be installed per APWA GSP 4-04.3(5) Shaping and Compaction.
2. Minimum surface longitudinal slope shall be 0.5%.
3. Geomembrane barrier shall provide an impermeable barrier between standard and permeable section. Geomembrane may also be required at the shoulder side of the road. It shall be installed 1" below finished grade of surfacing, as shown. Alternatively, the liner shall fold over the permeable ballast a minimum of 6". Geomembrane barrier seams shall overlap at least 18" or per manufacturer's recommendations. Geomembrane barrier shall extend the length of the permeable section when adjacent to standard pavement. See Std. Plan GSI-18.
4. Geotextile to be provided when recommended by geotechnical professional and shall be required when fines in native subgrade exceed 7% on the #200 sieve.
5. Geotextile for separation per WSDOT 9.33.2(1), woven, Table 3 and installed per WSDOT 2-12.3(1). Geotextile under sidewalk may be same as under road or WSDOT 9.33.2(1), Tables 1 and 2, nonwoven, moderate survivability.
6. See Std. Plan PD-01 for minimum pavement section.
7. Planting strip soils shall be per BMP L613 (see Std. Plan GSI-01), if applicable; or scarify or till subgrade to 3-inch depth; place 3-inches of topsoil on surface and till into 5-inches of site soil. Install 3-inches of arborist wood chip mulch or as specified on plans. Topsoil layer with a minimum organic matter content of 10% dry weight in planting beds, and 5% in turf areas, and a pH from 6.0 to 8.0 or matching the pH of the original undisturbed soil.
8. Permeable pavement surfacing shall meet APWA GSP 5-04.3 Construction Requirements Porous Asphalt (PHMA/PWMA) Acceptance Infiltration Test for porous asphalt or 5-06.3(6)A Infiltration Rate of the Placed Pavement for pervious concrete.
9. Permeable ballast may be extended under curb and sidewalk when approved.

REVIEWED BY		APPROVED FOR PUBLICATION	CITY OF TACOMA PERMEABLE ROADWAY WITH PERVIOUS SIDEWALKS
DCS	HMS		
PUBLIC WORKS	ENVIRONMENTAL SERVICES		
NA	NA	4/4/16	
TACOMA POWER	TACOMA WATER	CITY ENGINEER — DATE	STANDARD PLAN NO. SU-31b

KURTIS DEAN KINGSOLVER · STATE OF WASHINGTON · 31229 · REGISTERED PROFESSIONAL ENGINEER

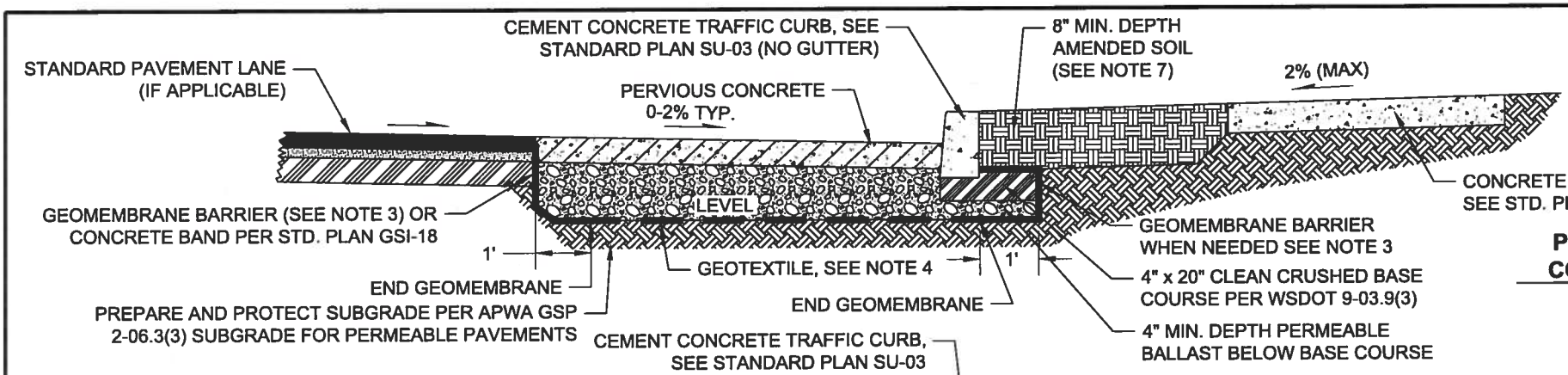

PERVIOUS CONCRETE
NTS

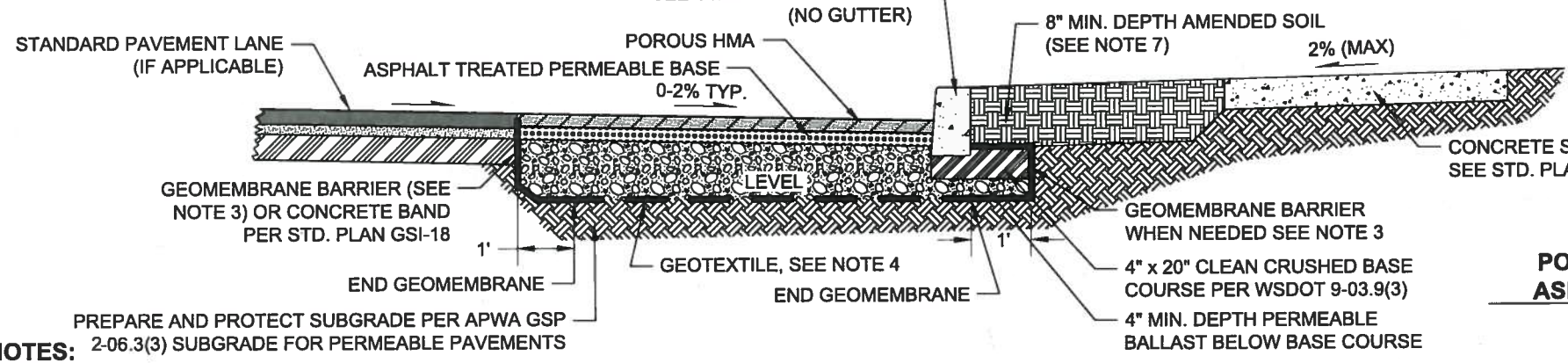

POROUS ASPHALT
NTS

NOTES:

1. Permeable ballast shall meet APWA GSP 4-04.2 Gravel Base and 9-03.9(2) Permeable Ballast Opt1 and shall be installed per APWA GSP 4-04.3(5) Shaping and Compaction.
2. Minimum surface longitudinal slope shall be 0.5%.
3. Geomembrane barrier shall provide an impermeable barrier between standard and permeable section. Geomembrane may also be required at the shoulder side of the road. It shall be installed 1" below finished grade of surfacing, as shown. Alternatively, the liner shall fold over the permeable ballast a minimum of 6". Geomembrane barrier seams shall overlap at least 18" or per manufacturer's recommendations. Geomembrane barrier shall extend the length of the permeable section when adjacent to standard pavement. See Std. Plan GSI-18.
4. Geotextile to be provided when recommended by geotechnical professional and shall be required when fines in native subgrade exceed 7% on the #200 sieve.
5. Geotextile for separation per WSDOT 9.33.2(1), woven, Table 3 and installed per WSDOT 2-12.3(1). Geotextile under sidewalk may be same as under road or WSDOT 9.33.2(1), Tables 1 and 2, nonwoven, moderate survivability.
6. See Std. Plan PD-01 for minimum pavement section.
7. Planting strip soils shall be per BMP L613 (see Std. Plan GSI-01), if applicable; or scarify or till subgrade to 3-inch depth; place 3-inches of topsoil on surface and till into 5-inches of site soil. Install 3-inches of arborist wood chip mulch or as specified on plans. Topsoil layer with a minimum organic matter content of 10% dry weight in planting beds, and 5% in turf areas, and a pH from 6.0 to 8.0 or matching the pH of the original undisturbed soil.
8. Permeable pavement surfacing shall meet APWA GSP 5-04.3 Construction Requirements Porous Asphalt (PHMA/PWMA) Acceptance Infiltration Test for porous asphalt or 5-06.3(6)A Infiltration Rate of the Placed Pavement for pervious concrete.
9. Permeable ballast may be extended under curb and sidewalk when approved, see Std. Plan SU-31b.

REVIEWED BY		APPROVED FOR PUBLICATION	CITY OF TACOMA PERMEABLE ROADWAY WITH PLANTING STRIP
DCS PUBLIC WORKS	GMS ENVIRONMENTAL SERVICES	4/4/16 CITY ENGINEER DATE	STANDARD PLAN NO. SU-31c
NA TACOMA POWER	NA TACOMA WATER		

KURTIS DEAN KINGSOLVER STATE OF WASHINGTON 31229 REGISTERED PROFESSIONAL ENGINEER

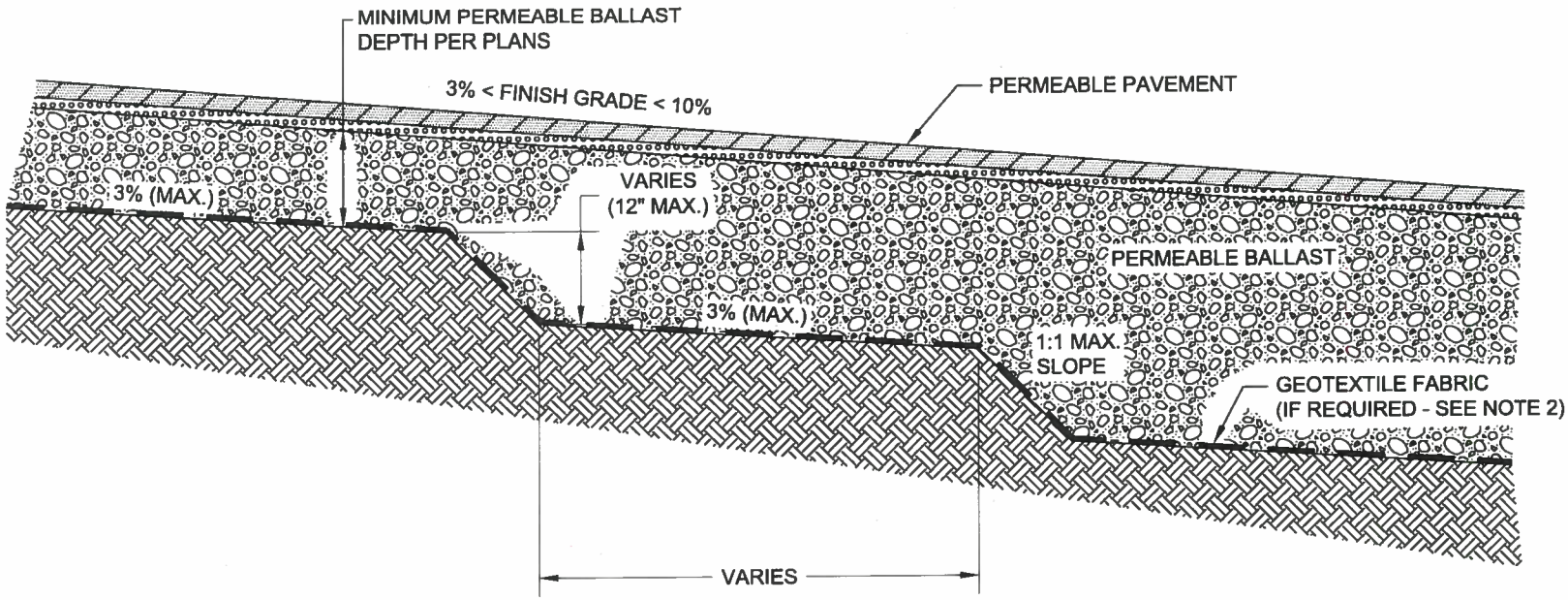

NOTES:

1. For finish grade no steeper than 10%.
2. Geotextile to be provided between native soil and permeable ballast when recommended by geotechnical professional and shall be required when fines in native subgrade exceed 7% on the #200 sieve.
3. Geotextile for separation under roadways shall be per WSDOT 9.33.2(1), woven, Table 3 and installed per WSDOT 2-12.3(1). Geotextile under sidewalk may be same as under road or WSDOT 9.33.2(1), Tables 1 and 2, nonwoven, moderate survivability.
4. See Std. Plans SU-31a, b and c for permeable roadway sections.
6. See Std. Plans SU-04a and b for permeable sidewalk sections.

REVIEWED BY			APPROVED FOR PUBLICATION	CITY OF TACOMA PERMEABLE PAVEMENT TERRACED SUBGRADE
DCS	GMS	KURTIS DEAN KINGSOLVER STATE OF WASHINGTON 31229 REGISTERED PROFESSIONAL ENGINEER	9/15/16	
PUBLIC WORKS	ENVIRONMENTAL SERVICES		CITY ENGINEER — DATE	STANDARD PLAN NO. SU-32
NA	NA			
TACOMA POWER	TACOMA WATER			

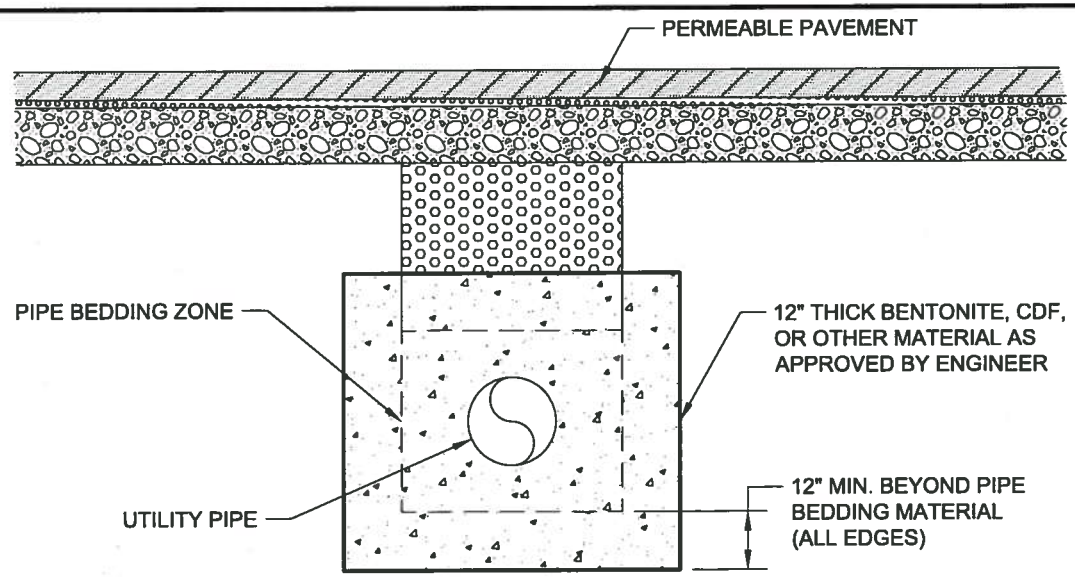

SECTION
NTS

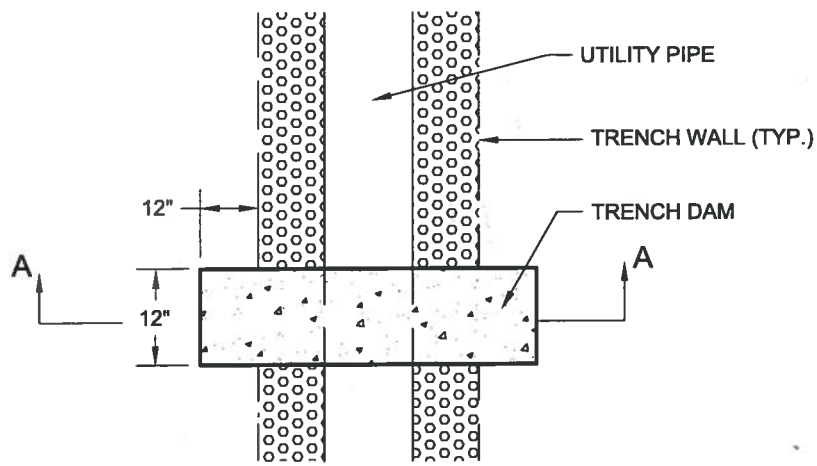

PLAN
NTS

NOTES:

1. Location on mains per plan sheet.
2. Review design with the City for utilities greater than 36 inches in diameter.
3. For service lines, install trench dams at approximate back of walk where utility services are installed beyond the permeable ballast section.
4. Ductile iron pipe shall be encased in a polyethylene sleeve, meeting the requirements of American Waterworks Association (AWWA).

REVIEWED BY		APPROVED FOR PUBLICATION	CITY OF TACOMA
DCS PUBLIC WORKS	GMS ENVIRONMENTAL SERVICES	CITY ENGINEER — 4/4/16 DATE	TRENCH DAM
NA TACOMA POWER	NA TACOMA WATER		STANDARD PLAN NO. SU-33

KURTIS DEAN KINGSOLVER · STATE OF WASHINGTON · 31229 · REGISTERED PROFESSIONAL ENGINEER

NOTES:

1. Surface mounting of sign posts, especially within traffic islands or medians, is only allowable at locations of existing hard surface with special authorization from the city's traffic engineering group, (Exception: Surface mounting of flexible post object markers within islands or medians is permitted).
2. If finished ground line is a hard surface, then the top of foundation shall be smooth, dense, and uniform to finished ground line.
3. The base for surface mounted sign shall be constructed such that the sign post will be plumb when installed.
4. Signs shall be mounted with sign face perpendicular to the adjacent roadway edge/curb face unless required to be mounted at 45-degrees towards roadway edge/curb face (and approaching traffic) per the MUTCD, such as a parking sign with an integrated arrow.

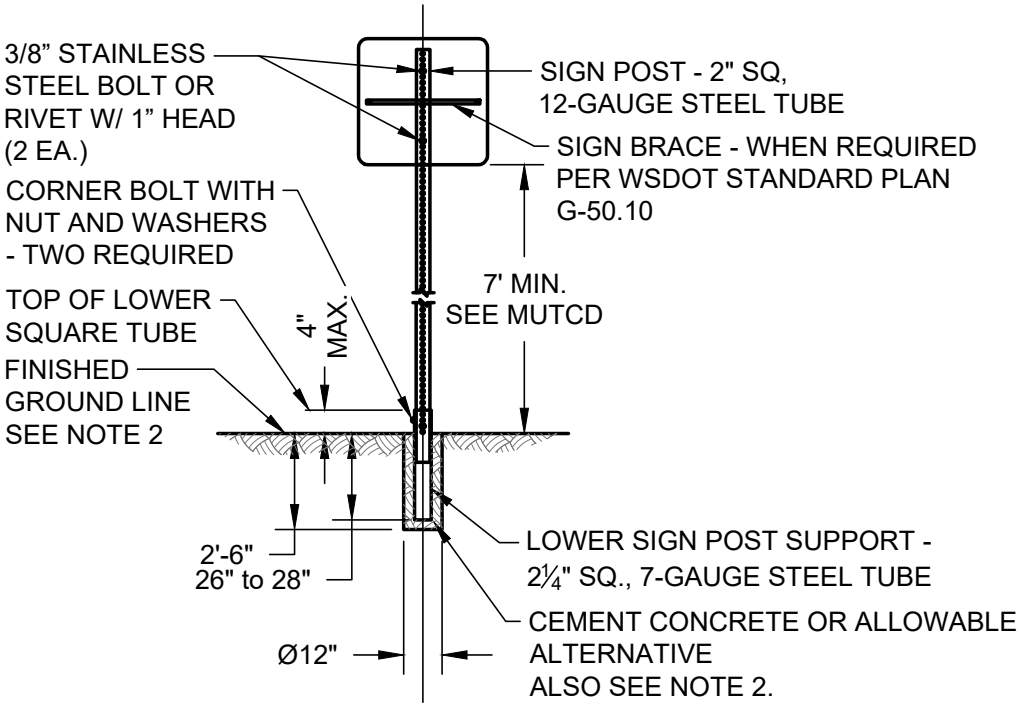

SIGN SUPPORT DETAIL FOR STEEL SIGN POST

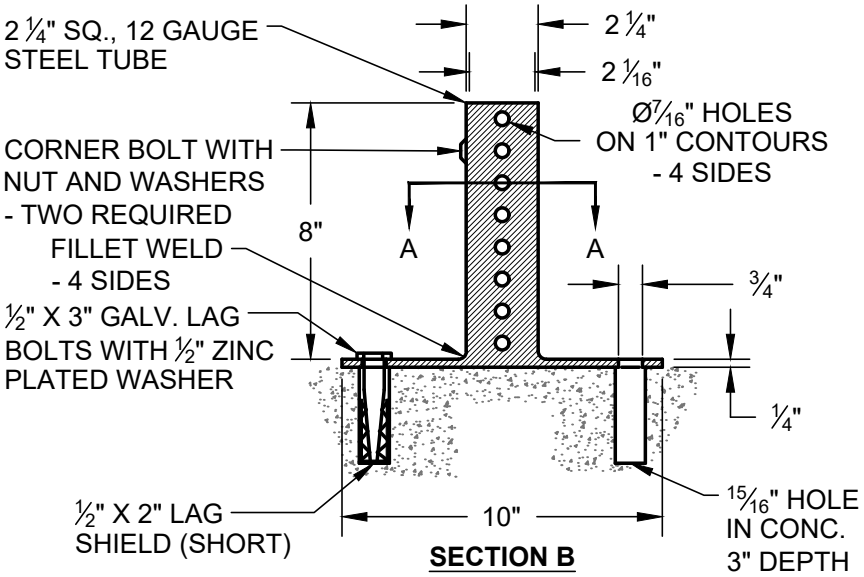

SECTION B

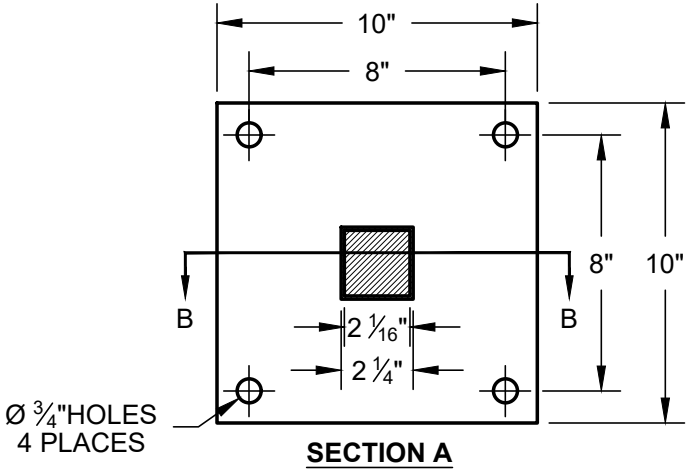

SECTION A

BASE PLATE DETAIL FOR STEEL SIGN POST SURFACE MOUNTING (SEE NOTE 1)

REVIEWED BY DS JD PUBLIC WORKS	DS EW ENVIRONMENTAL SERVICES		APPROVED FOR PUBLICATION	CITY OF TACOMA
N/A TACOMA POWER	N/A TACOMA WATER		DocuSigned by: Ramiro Chavez CITY ENGINEER 04/11/2024 DATE	SIGN POST INSTALLATION
				STANDARD PLAN NO. SU-34

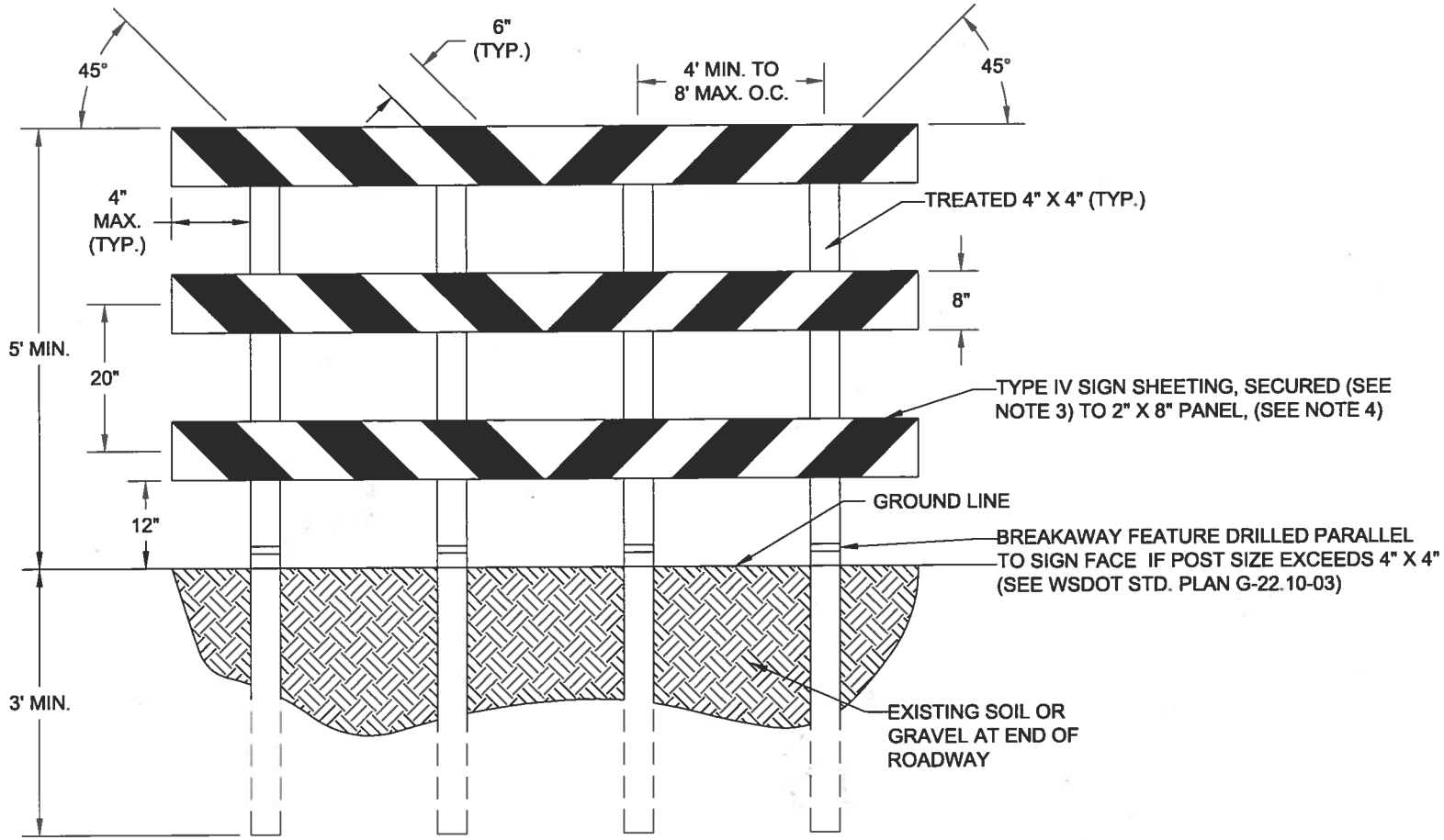

NOTES:

1. Barricades shall meet the design criteria of MUTCD section 6F.68 for a Type 3 barricade, except that the colors of the stripes shall be retroreflective (Type IV or better) white and retroreflective (Type IV or better) red.
2. Barricade section shall extend to limits of the roadway surface relying on the least number of posts while still providing equidistant spacing in accordance with the above detail.
3. Sign sheet shall be bolted to (or integral to) the cross member using 5/8-inch galvanized bolts with fender washers. Securing hardware shall not consist of or include nails, lag bolts, or screws.
4. Panel material shall be high density polyethelene (HDPE), or approved equivalent such as #2 or better Douglas Fir (Untreated).

REVIEWED BY			APPROVED FOR PUBLICATION	CITY OF TACOMA
DCS	GMS	KURTIS DEAN KINGSOLVER STATE OF WASHINGTON 31229 REGISTERED PROFESSIONAL ENGINEER		PERMANENT ROADWAY TERMINUS TYPE 3 BARRICADE
PUBLIC WORKS	ENVIRONMENTAL SERVICES		CITY ENGINEER — DATE 4/4/16	STANDARD PLAN NO. SU-35
NA	NA			
TACOMA POWER	TACOMA WATER			

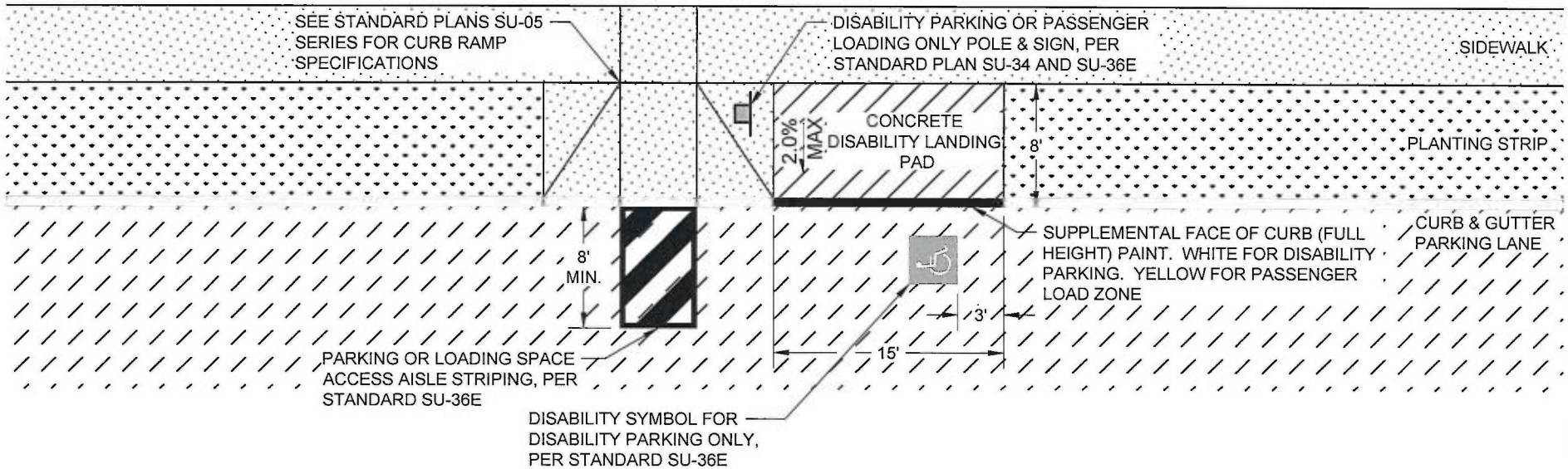

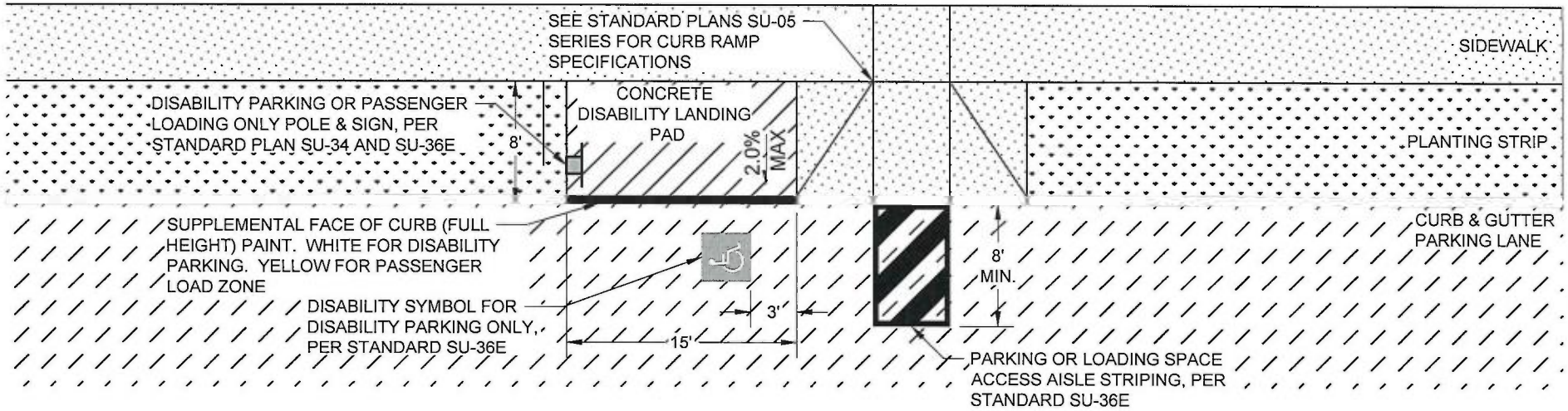

REVIEWED BY			APPROVED FOR PUBLICATION	CITY OF TACOMA
DCS	GMC		8/22/17	PARALLEL DISABILITY PARKING STALL OR PASSENGER LOAD ZONE WITH ADJACENT PLANTING STRIP
PUBLIC WORKS	ENVIRONMENTAL SERVICES		CITY ENGINEER / DATE	STANDARD PLAN NO. SU-36A
N/A	N/A			
TACOMA POWER	TACOMA WATER			

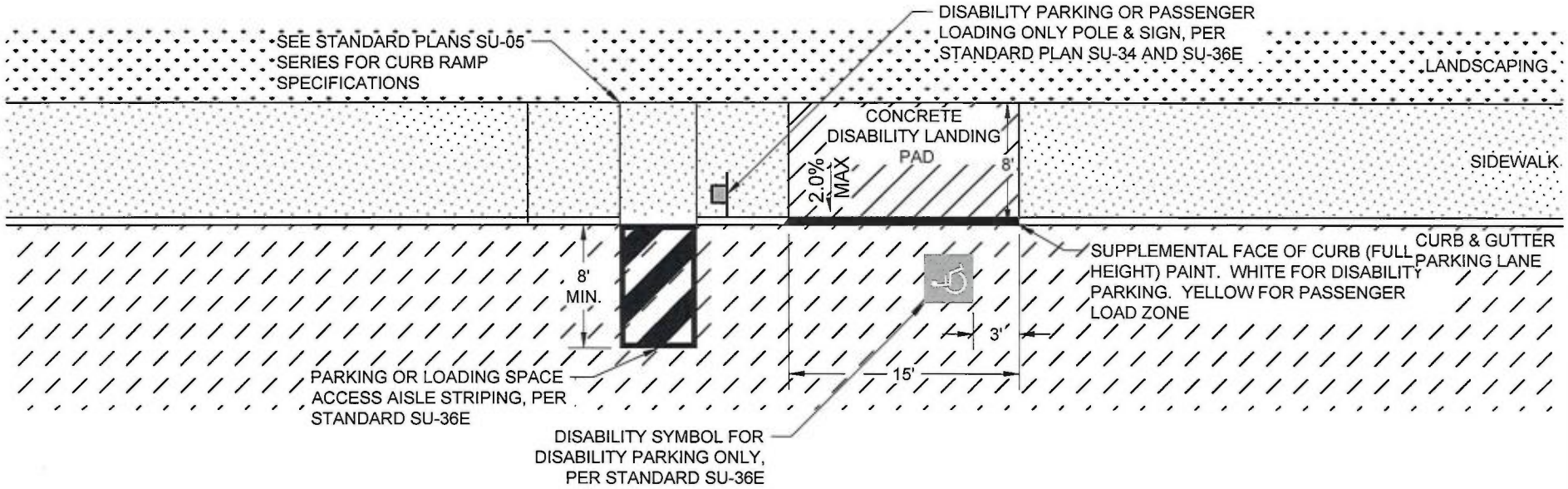

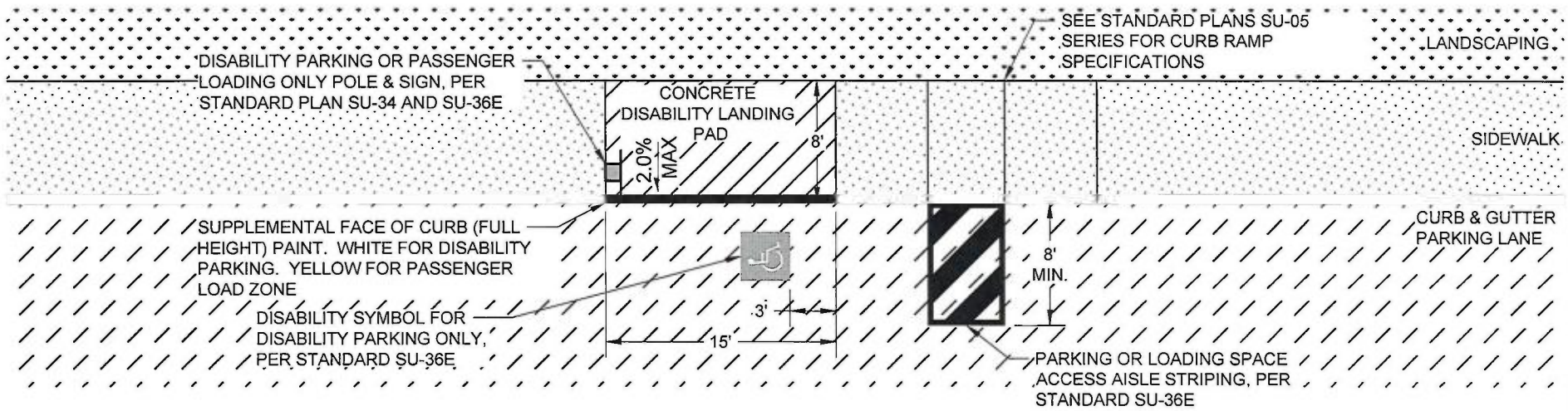

REVIEWED BY		APPROVED FOR PUBLICATION	CITY OF TACOMA
DCS PUBLIC WORKS	GMS ENVIRONMENTAL SERVICES	8/22/17 CITY ENGINEER — DATE	PARALLEL DISABILITY PARKING STALL OR PASSENGER LOAD ZONE WITH ADJACENT SIDEWALK
N/A TACOMA POWER	N/A TACOMA WATER		STANDARD PLAN NO. SU-36B

KURTIS DEAN KINGSOLVER — STATE OF WASHINGTON — 31229 — REGISTERED PROFESSIONAL ENGINEER

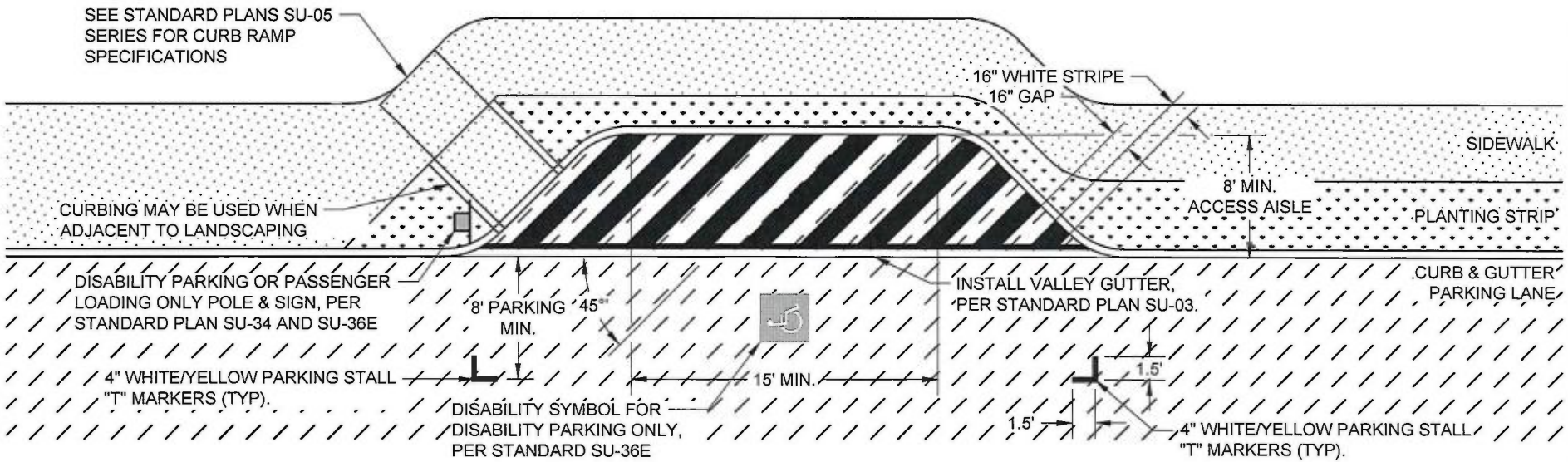

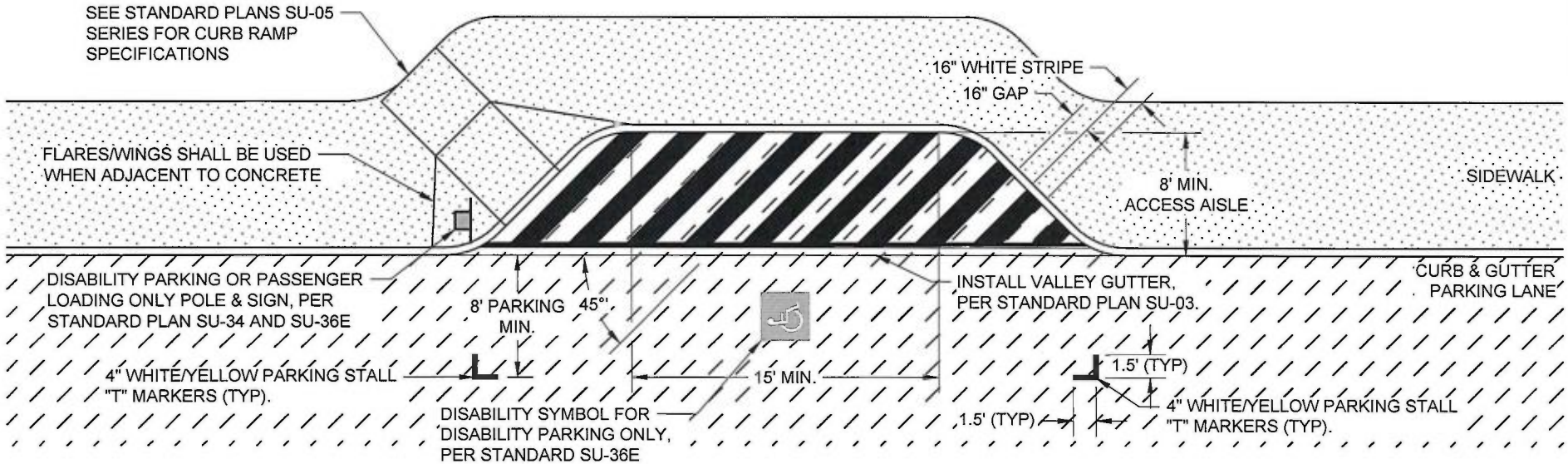

REVIEWED BY		APPROVED FOR PUBLICATION	CITY OF TACOMA
DCS	GMS	8/22/17	PARALLEL DISABILITY PARKING STALL OR PASSENGER LOAD ZONE WITH BULB-IN ACCESS AISLE
PUBLIC WORKS	ENVIRONMENTAL SERVICES	CITY ENGINEER / DATE	STANDARD PLAN NO. SU-36C
N/A	N/A		
TACOMA POWER	TACOMA WATER		

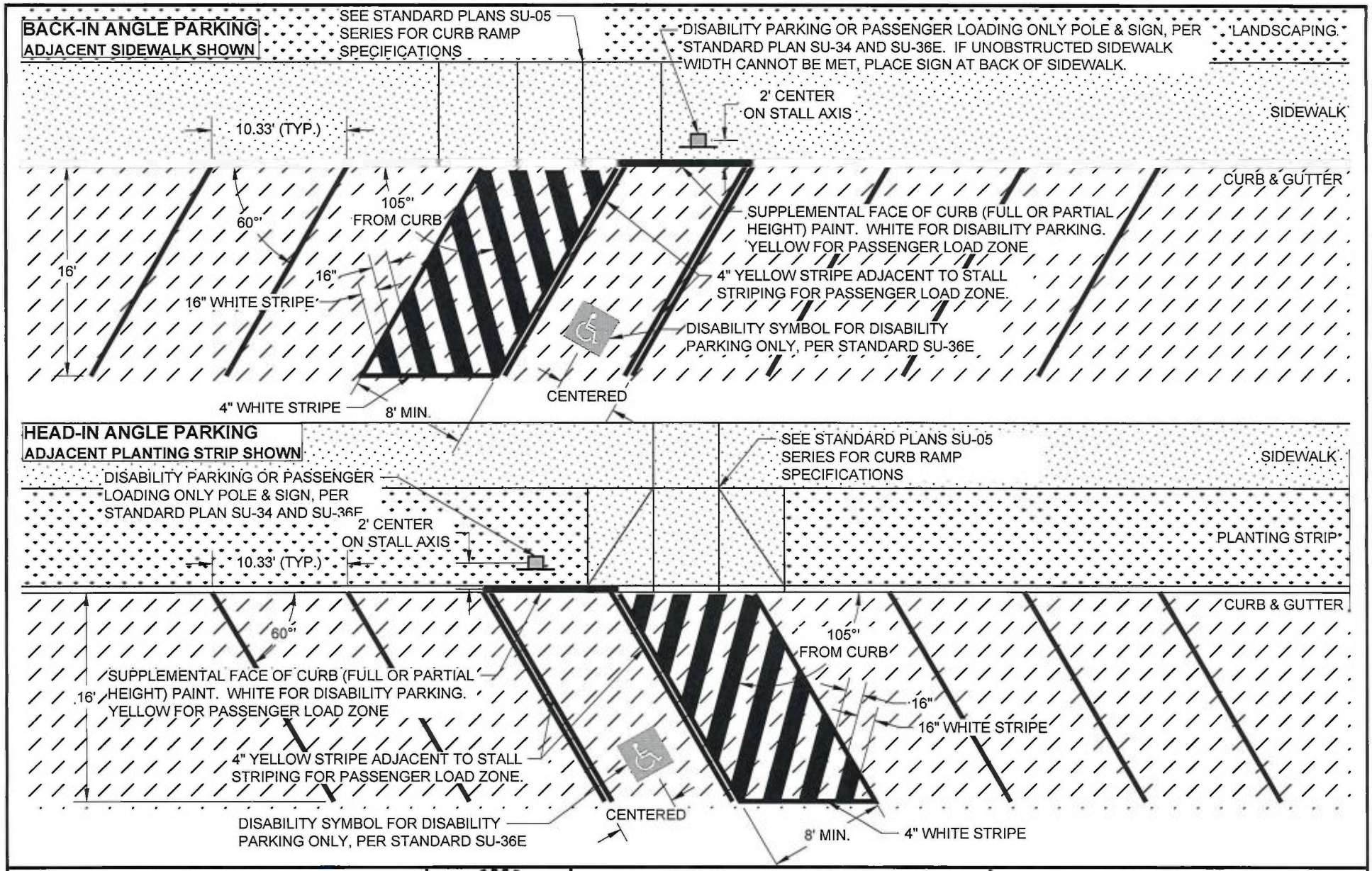

REVIEWED BY		APPROVED FOR PUBLICATION	CITY OF TACOMA
DCS	Guy	8/22/17	ANGLED DISABILITY PARKING STALL OR PASSENGER LOAD ZONE
PUBLIC WORKS	ENVIRONMENTAL SERVICES	CITY ENGINEER — DATE	STANDARD PLAN NO. SU-36D
N/A	N/A		
TACOMA POWER	TACOMA WATER		

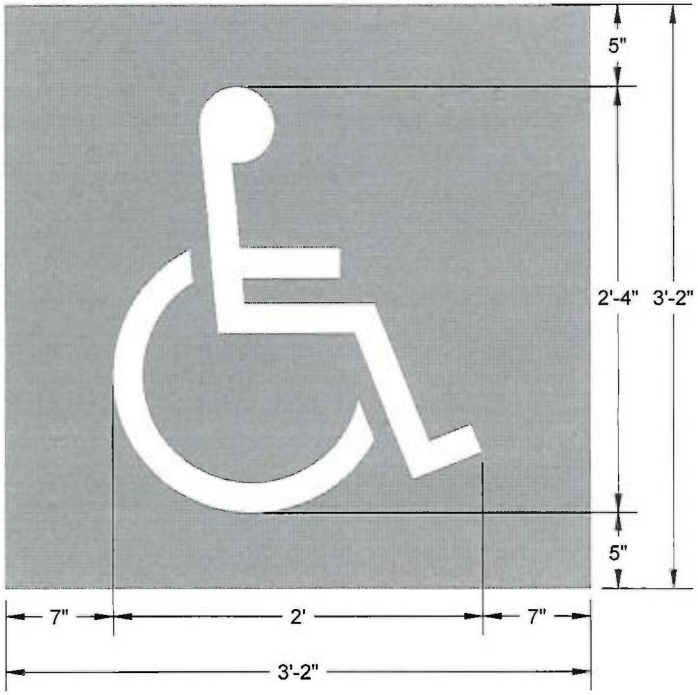

TOTAL MARKING AREA = 10 SQ. FT.
WHITE = 1 SQ. FT.
BLUE = 9 SQ. FT.

DISABILITY PARKING SPACE SYMBOL
WITH OPTIONAL BLUE BACKGROUND

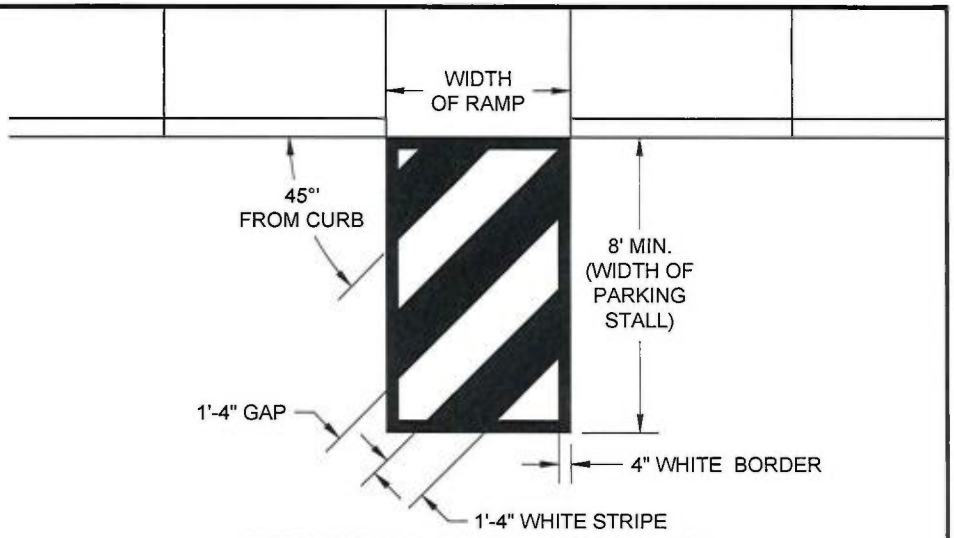

PARALLEL PARKING/LOADING SPACE
ACCESS AISLE STRIPING

(BEGIN/END TIMES MAY VARY
DEPENDING ON LOCATION)

PASSENGER LOADING ZONE
SIGN
(RED ON WHITE)

DISABILITY PARKING STALL
SIGNS
(WHITE ON BLUE)

REVIEWED BY			APPROVED FOR PUBLICATION	CITY OF TACOMA DISABILITY PARKING & PASSENGER LOAD ZONE STRIPING & SIGNING DETAILS
DCS	Gms		8/22/17	
PUBLIC WORKS	ENVIRONMENTAL SERVICES		CITY ENGINEER — DATE	STANDARD PLAN NO. SU-36E
N/A	N/A			
TACOMA POWER	TACOMA WATER			

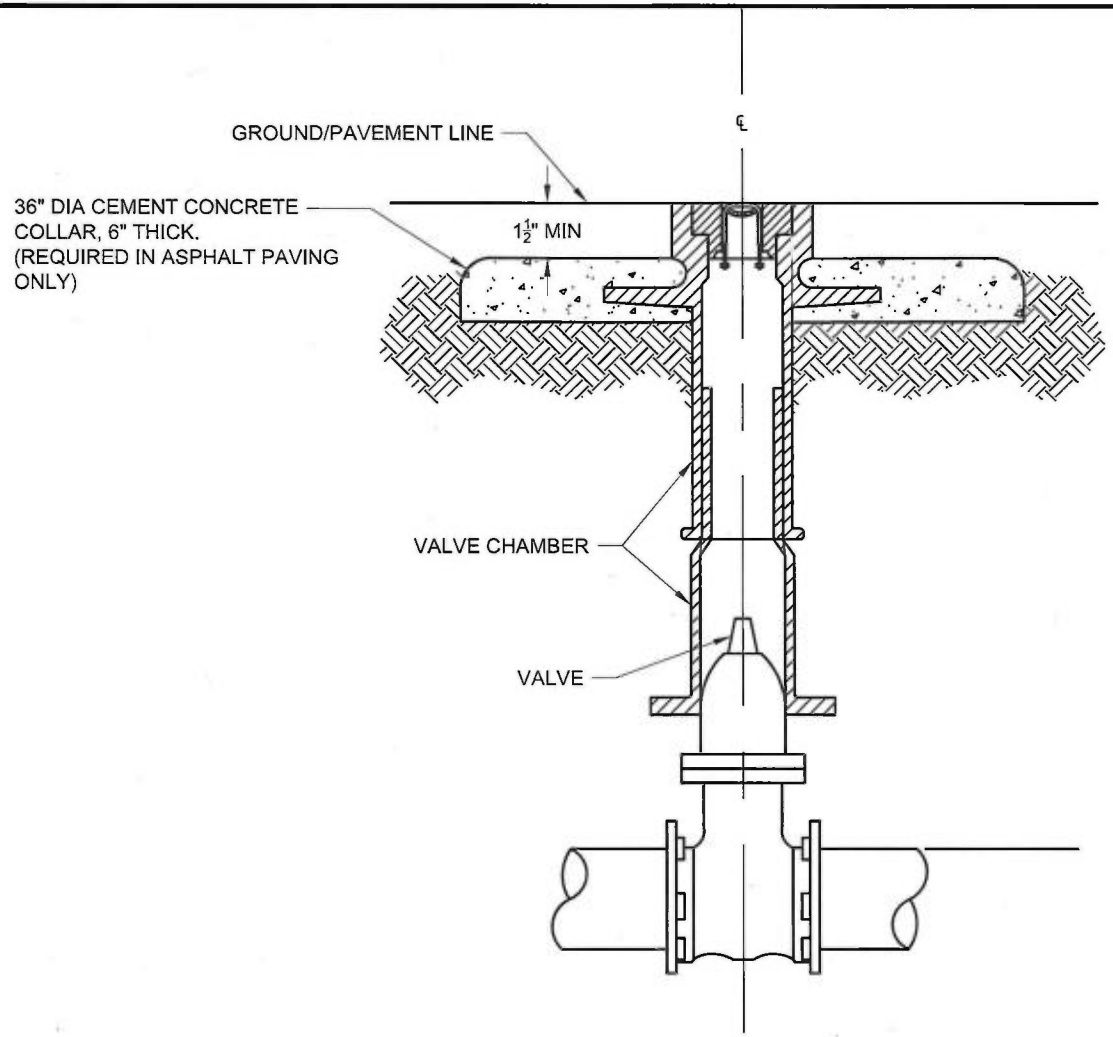

NOTES:

Class 3000 cement concrete shall be placed, 1 ½" min, below the finished pavement surface.

24-hours after placing the cement collar, HMA Class ⅜" PG 64-22 shall be placed in accordance with Standard Plan SU-15.

If the valve chamber being adjusted belongs to Tacoma Water, the Contractor shall contact Tacoma Water, Operations, at 253-502-8742 for final inspection.

REVIEWED BY			APPROVED FOR PUBLICATION	CITY OF TACOMA VALVE CHAMBER COLLAR DETAIL
DCS PUBLIC WORKS	GMS ENVIRONMENTAL SERVICES	KURTIS DEAN KINGSOLVER STATE OF WASHINGTON 31229 REGISTERED PROFESSIONAL ENGINEER	5/31/12 CITY ENGINEER DATE	
N/A TACOMA POWER	G.W. TACOMA WATER			STANDARD PLAN NO. SU-37

SIDEWALK WITH PLANTER STRIP

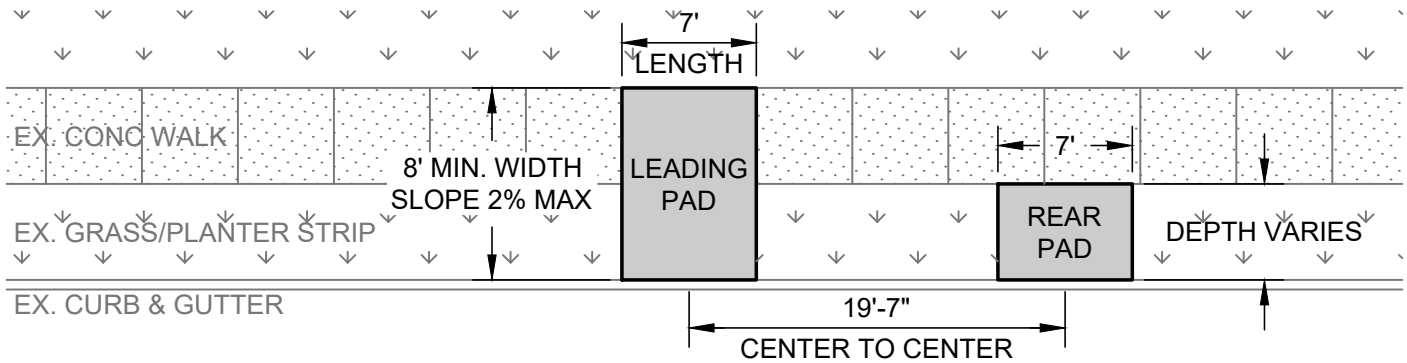

COMBINATION WALK

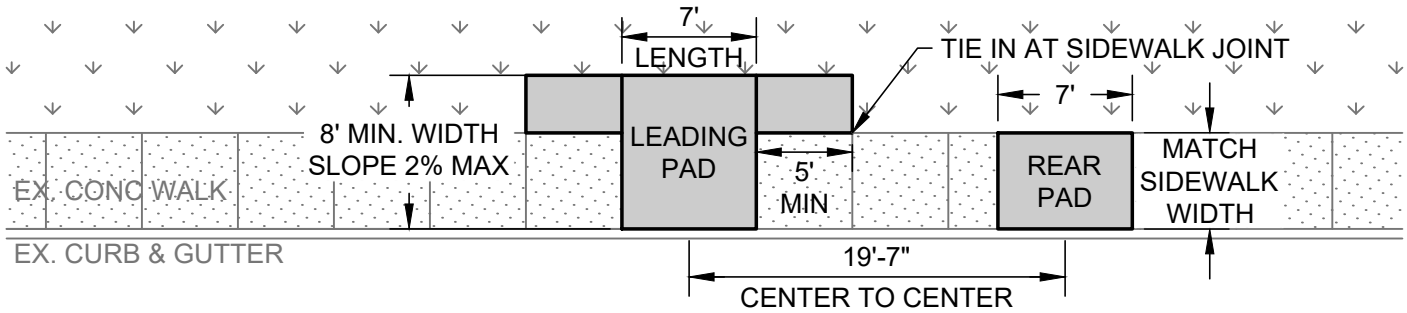

NOTES

1. Leading and rear pads shall have a minimum concrete thickness of 4".
2. Leading and rear pads shall be a minimum of 7' in length and leading pads shall be a minimum of 8' in width unless otherwise specified.
3. The leading and rear pads shall be connected to the nearest sidewalk by a pedestrian accessible route.
4. If there is no sidewalk present or the existing sidewalk doesn't meet current standards, connect leading and rear pads with concrete sidewalk.
5. The slope of the bus pad measured parallel to the adjacent street shall match the street grade. The slope of the bus pad, measured from the back of pad to the back of curb, shall not exceed 2%.
6. When placing concrete adjacent to existing curb and gutter, curb and gutter will be repaired as necessary before placing concrete forms for bus pad.
7. Staking is required where no curb is present.
8. All expansion joints shall be full depth with 3/8" premolded joint filler.
9. All soft and yielding foundation material shall be removed and replaced with crushed surfacing top course (CSTC) per the WSDOT Standard Specifications.
10. Refer to to COT Standard Plans SU-04 series for any sidewalk replacement.
11. Bus stop pole, sign, & all amenities to be installed by Pierce Transit.
12. Contact Pierce Transit once work is complete. (253-983-2706)

REVIEWED BY			APPROVED FOR PUBLICATION	CITY OF TACOMA
DS RVDR PUBLIC WORKS	DS EW ENVIRONMENTAL SERVICES	JOSHUA JAMES DIEKMANN STATE OF WASHINGTON 41361 REGISTERED PROFESSIONAL ENGINEER	DocuSigned by: CITY ENGINEER	LEADING & REAR BUS BOARDING PADS
DS TACOMA POWER	DS TS TACOMA WATER		12/01/2022 DATE	STANDARD PLAN NO. SU-38

SIDEWALK WITH PLANTER STRIP

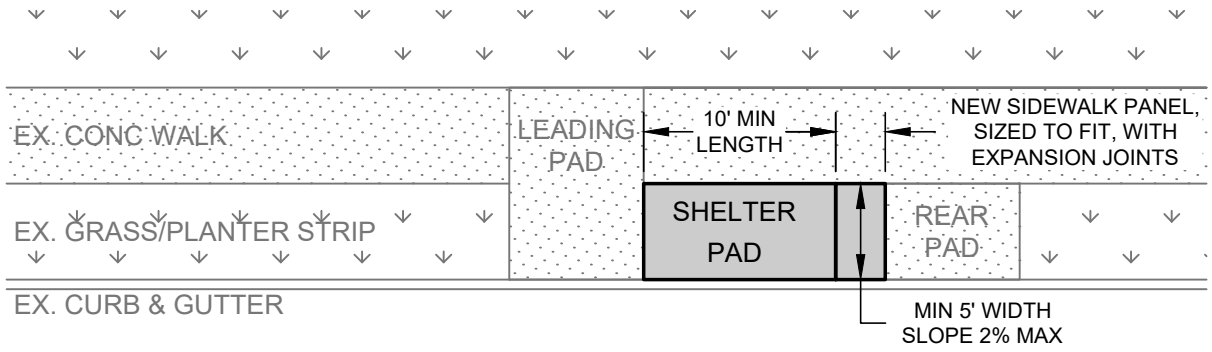

COMBINATION WALK

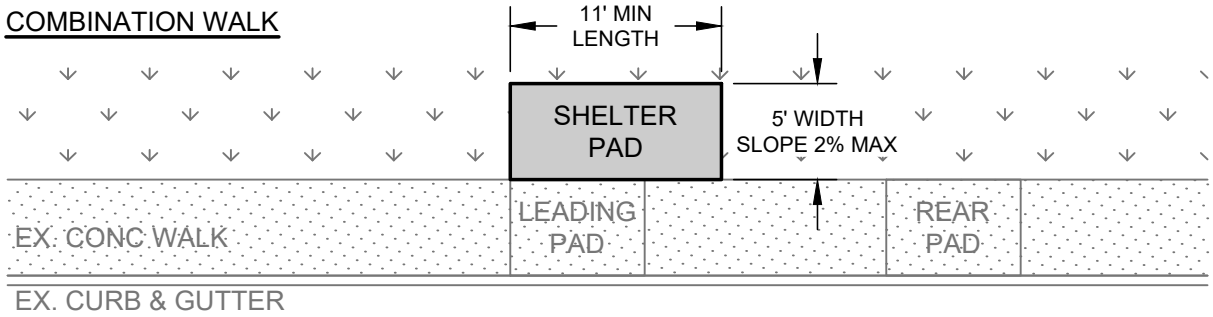

NOTES

1. Shelter pads shall have a minimum concrete thickness of 6"; if cantilevered shelter, consult with Pierce Transit for design requirements.
2. Shelter pads shall be a minimum of 5' in width and 10' in length. If the bus shelter is located behind the sidewalk, the pad shall be a minimum of 11' in length.
3. The shelter pad shall be connected to the nearest sidewalk by a pedestrian accessible route.
4. The slope of the shelter pad measured parallel to the adjacent street shall match the street grade. The slope of the shelter pad, measured from the back of pad to the back of curb, shall not exceed 2%.
5. When placing concrete adjacent to existing curb and gutter, curb and gutter will be repaired as necessary before placing concrete forms for shelter pad.
6. Staking is required where no curb is present.
7. All expansion joints shall be full depth with 3/8" premolded joint filler.
8. Expansion joints are required between shelter pads and sidewalk.
9. All soft and yielding foundation material shall be removed and replaced with crushed surfacing top course (CSTC) per the WSDOT Standard Specifications.
10. Refer to to COT Standard Plans SU-04 series for any sidewalk replacement.
11. Bus stop pole, sign, & all amenities to be installed by Pierce Transit. Refer to SU-38 for placement of Leading & Rear Bus Boarding Pads.
12. Contact Pierce Transit once work is complete. (253-983-2706)

REVIEWED BY			APPROVED FOR PUBLICATION	CITY OF TACOMA
DS RVDR PUBLIC WORKS	DS EW ENVIRONMENTAL SERVICES	JOSHUA JAMES DIEKMANN STATE OF WASHINGTON 41361 REGISTERED PROFESSIONAL ENGINEER	DocuSigned by: 12/01/2022	BUS SHELTER PAD LAYOUT
DS TACOMA POWER	DS TS TACOMA WATER		CITY ENGINEER 66A2DE3EB2E248F... DATE	STANDARD PLAN NO. SU-39

NOTES

1. Single stamp/impression shall be placed in 6" of concrete with 4" border as close to the preferred location as possible. If constructed in Historic District, see Standard Plan HD-NS03 for details on applying concrete color.
2. Existing stamp/impression shall be sawcut to no less than 3" from stamp lettering or symbol and shall be no smaller than 12" in any direction.
3. Street name to be parallel with the corresponding street, and oriented to be read from the sidewalk, and as though the reader is facing the street.
4. See Standard Plan SU-05 series for details on curb ramp construction.
5. If a crack or broken section of concrete is in the existing stamped area to be cut, then the stamp shall be disposed of and not salvaged.

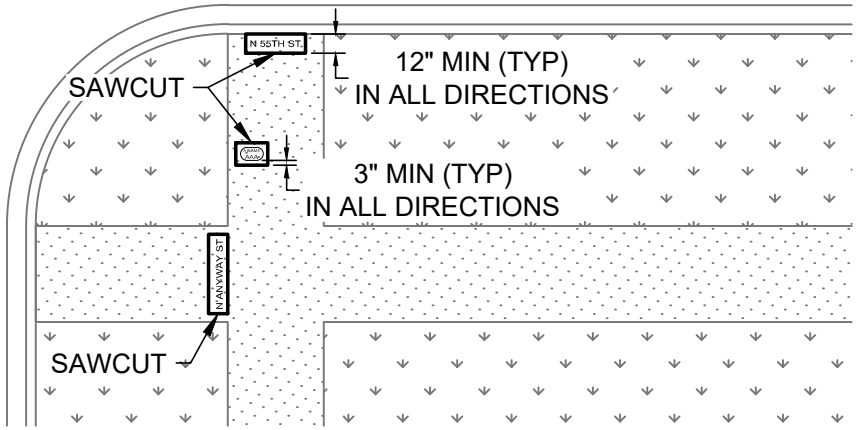

EXISTING HISTORIC MAKER'S MARK TO BE PRESERVED

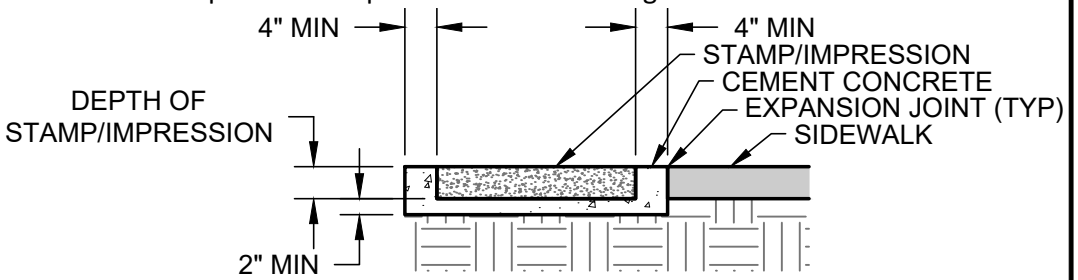

EXISTING HISTORIC MAKER'S MARK TO BE PRESERVED

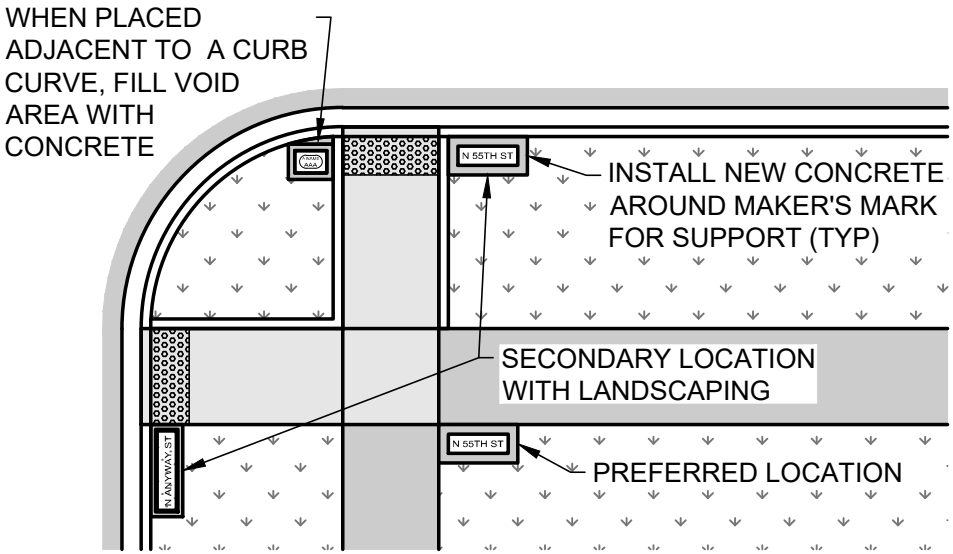

MAKER'S MARK POTENTIAL NEW LOCATIONS
CURB RAMPS WITH LANDSCAPING AND PED CURBS

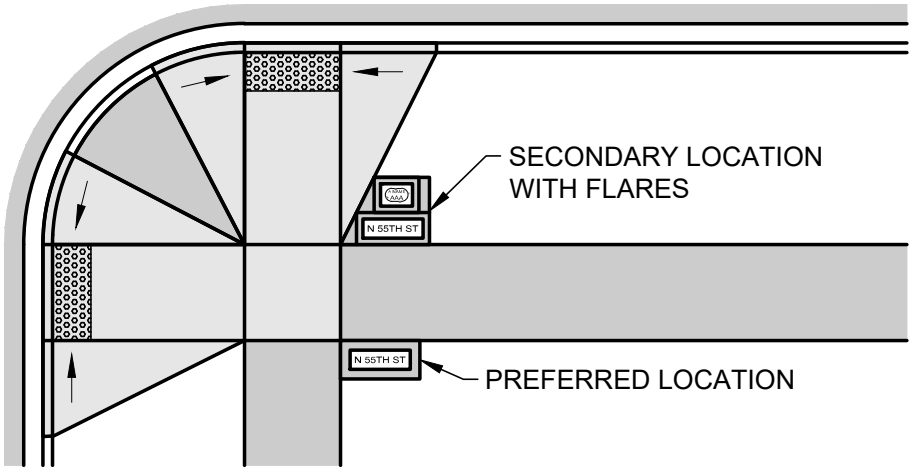

MAKER'S MARK POTENTIAL NEW LOCATION
CURB RAMPS WITH WINGS/FLARES AND WITH OR WITHOUT LANDSCAPING

REVIEWED BY		APPROVED FOR PUBLICATION	CITY OF TACOMA HISTORIC MAKER'S MARK SIDEWALK STREET NAME IMPRINT PRESERVATION
DS RVDR PUBLIC WORKS	DS EW ENVIRONMENTAL SERVICES	DocuSigned by: 10/02/2022 CITY ENGINEER DATE	STANDARD PLAN NO. SU-40
DS TACOMA POWER	DS TS TACOMA WATER		

JOSHUA JAMES DIEKMANN
STATE OF WASHINGTON
41361
REGISTERED
PROFESSIONAL ENGINEER